Revel®

Frameless Pivot Shower Door

K-707556-L

Material

- Frameless, 5/16" (8mm) thick Crystal Clear tempered glass.

Technology

- Self-closing mechanism offers superior performance and security against water leakage.
- Vertical handle complements the contemporary style.
- Ultra-low threshold creates easy entry and exit to the showering space.
- CleanCoat® nanotechnology provides a smooth, nonstick surface to help prevent buildup of water stains, bacteria and mildew on your glass, to make it easy to clean and keep it looking like new.
- Out-of-plumb adjustability for simpler installation.
- Maximum width adjustability.

Installation

- Door can be installed to open to the left or right to suit your bathroom layout.
- Pivot shower door.
- Not for use in hospitality.
- For residential use only.

Recommended Products/Accessories

K-23723 Faucet cleaner

Included Components

Additional Components:

Hardware kit

Codes/Standards

ANSI Z97.1

CPSC 16CFR 1201

KOHLER® One-Year Limited Warranty

See website for detailed warranty information.

Available Colors/Finishes

Color tiles intended for reference only.

Color	Code	Description
	SHP	Bright Polished Silver
	ABZ	Anodized Dark Bronze
	BNK	Anodized Brushed Nickel

Available Glass Options

Code	Description
L	Crystal Clear

Revel®

Frameless Pivot Shower Door

K-707556-L

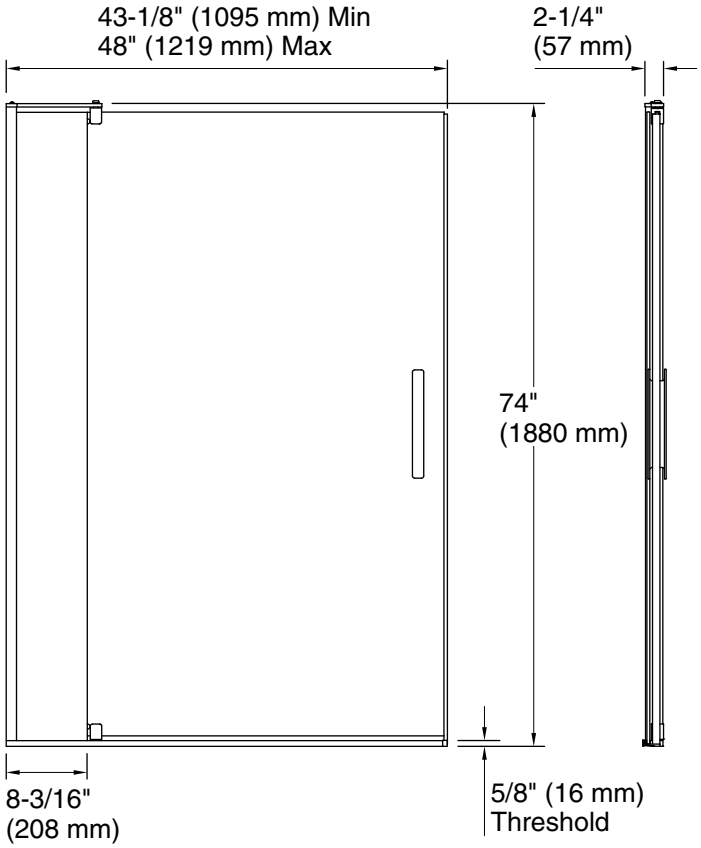

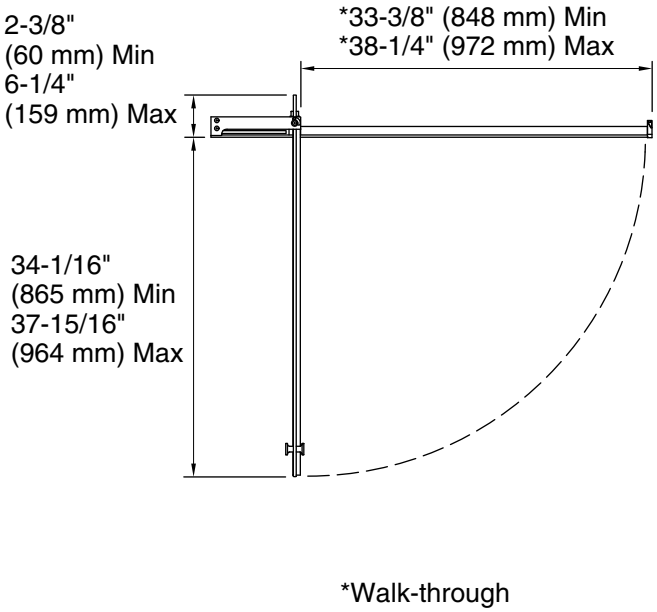

Technical Information

All product dimensions are nominal.

Installation type:	For shower base installation
Opening style:	Pivot
Opening Width - Min:	43-1/8" (1095 mm)
Opening Width - Max:	48" (1219 mm)
Walk-through - Min:	33-3/8" (848 mm)
Walk-through - Max:	38-1/4" (972 mm)
Base-To-Wall Radius – Max:	3/8" (10 mm)
Glass thickness:	5/16" (8 mm)
Glass coating:	CleanCoat®

Notes

Install this product according to the installation guide.

Strike jamb is made of clear plastic and may not cover existing shower door holes.

NOTICE: The vertical opening should be a minimum of 78" (2032 mm) to allow clearance for installation.