KOHLER. Faucets

Refinia®

Single-Handle Bathroom Sink Faucet

K-5313-4

Features

- Optional escutcheon included for 1- or 3-hole installation
- KOHLER® ceramic disc valves exceed industry longevity standards for a lifetime of durable performance
- High-arch spout offers more space to work in the sink
- 1.2 gpm (4.5 lpm) maximum flow rate at 60 psi (4.14 bar)

Material

- Premium material construction for durability and reliability
- KOHLER® finishes resist corrosion and tarnishing

Recommended Products/Accessories

K-23726 Drain treatment
K-23723 Faucet cleaner



ADA | CSA B651 | OBC

Codes/Standards

ASME A112.18.1/CSA B125.1
NSF/ANSI/CAN 61
All applicable US Federal and State material regulations
DOE - Energy Policy Act 1992
EPA WaterSense®
California Energy Commission (CEC)
ADA
ICC/ANSI A117.1
CSA B651
OBC
IAPMO Certification

KOHLER® Faucet Lifetime Limited Warranty

See website for detailed warranty information.

KOHLER. Faucets

Refinia®

Single-Handle Bathroom Sink Faucet

K-5313-4

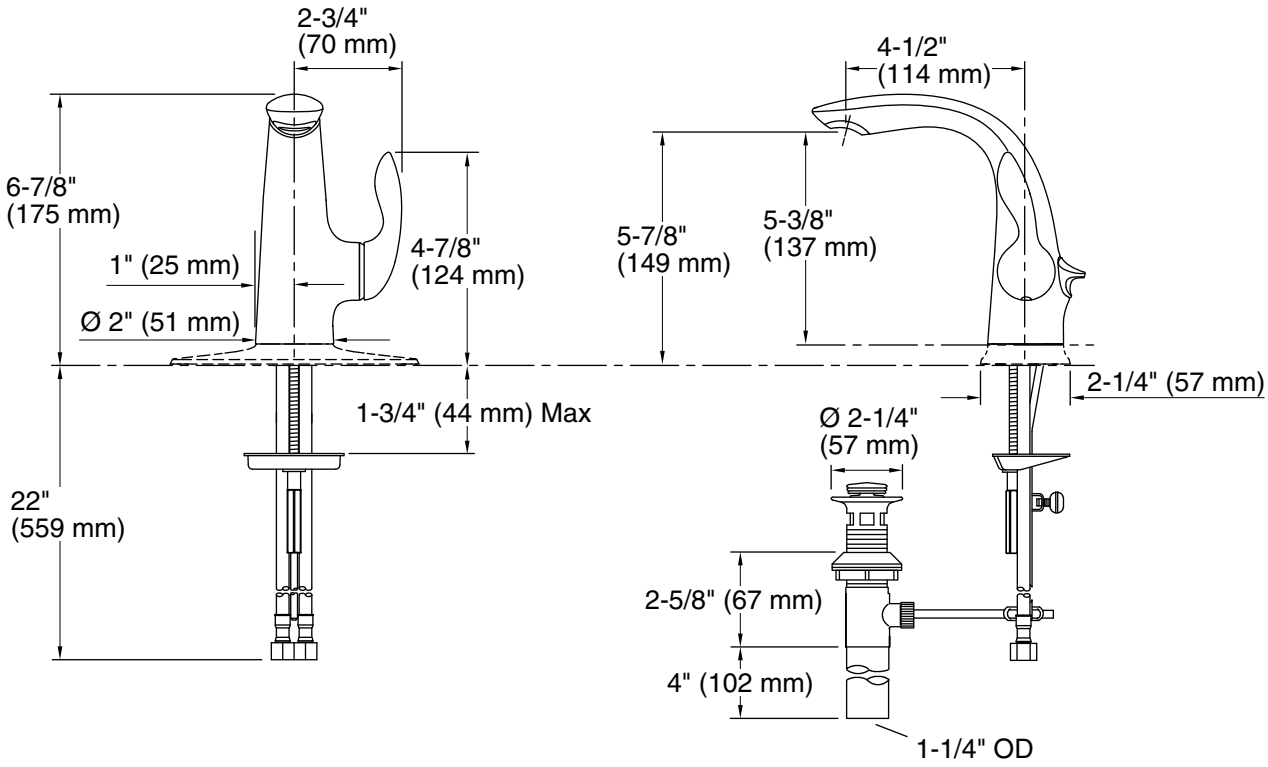

Pop-Up Drain

Technical Information

All product dimensions are nominal.

Faucet:

Flow rate:	1.2 gal/min (4.5 l/min)
Pressure:	60 psi (4.1 bar)
Drain included:	Yes
Drain with overflow:	Yes

Spout:

Spout reach:	4-9/16" (115 mm)

Notes

Install this product according to the installation guide.

If possible, install the faucet and drain to the bathroom sink before installing the sink.

ADA compliant for handles only.

ADA, OBC, CSA B651 compliant when installed to the specific requirements of these regulations.