Morningside™

Wall-mount Wheelchair Bathroom Sink

K-12634

Features

- Made from premium materials that withstand high-volume usage.
- 20"L x 27"W.
- 11-1/2" center drilling.
- Drilled for concealed arm carrier.
- ADA-compliant when installed with K-13885 offset drain.

Material

- Vitreous china.

Installation

- Wall-mount.

Recommended Products/Accessories

K-8998 P-Trap
K-7131-A Offset Drain
K-23726 Drain treatment
K-23725 Cast iron cleaner



ADA

Codes/Standards

ASME A112.19.2/CSA B45.1
ADA
ICC/ANSI A117.1

KOHLER® One-Year Limited Warranty

See website for detailed warranty information.

Available Colors/Finishes

Color tiles intended for reference only.

Color	Code	Description
	0	White

Morningside™

Wall-mount Wheelchair Bathroom Sink

K-12634

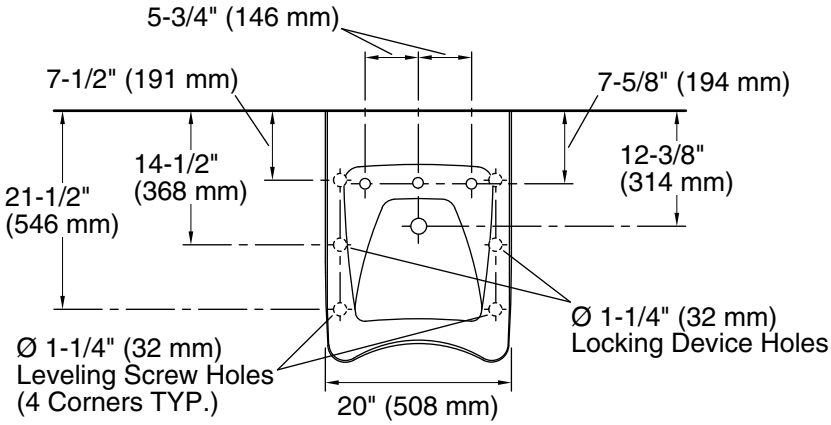

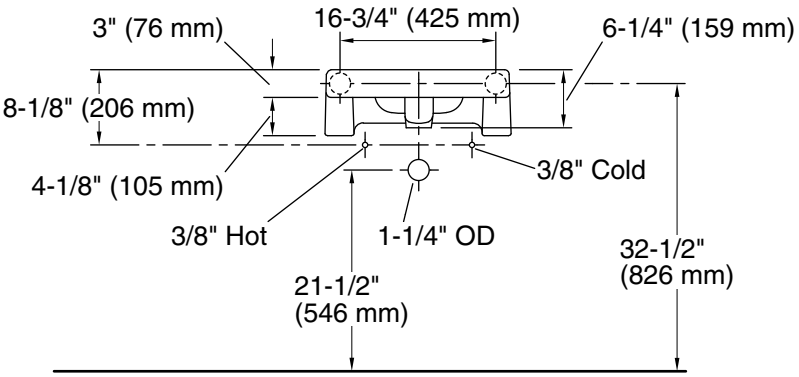

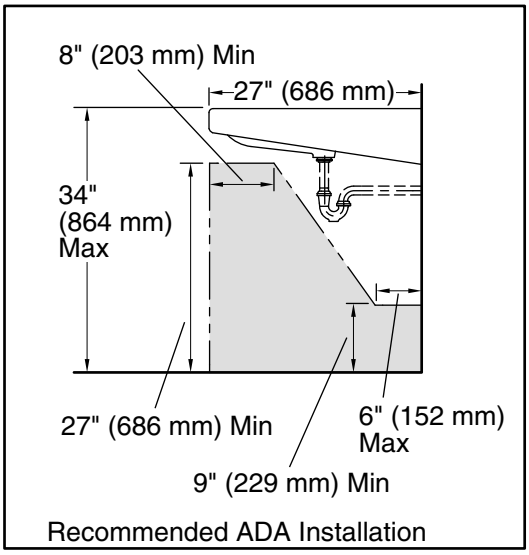

Technical Information

All product dimensions are nominal.

Bowl configuration:	Single
Installation:	Wall-mount
Bowl area (Only):	Length: 14" (356 mm) Width: 13" (330 mm) Water depth: 2-5/8" (67 mm)
Number of deck holes:	3
Faucet hole(s):	1-3/8" (35 mm)
Drain hole:	1-3/4" (44 mm)

Notes

Install this product according to the installation instructions.

ADA compliant when installed to the specific requirements of these regulations.