MODEL	WEIGHT		C.O.B. (DIM. "X")
	WET -KG [LBS]	DRY -KG [LBS]	MM [IN]
14EKOZD/12EFKOZD	368 [812]	355 [782]	457 [18.0]
16EKOZD/13.5EFKOZD	376 [830]	363 [800]	471 [18.6]

NOTE
C.O.B. DIMENSION IS TAKEN FROM REAR OF ALTERNATOR END BRACKET.

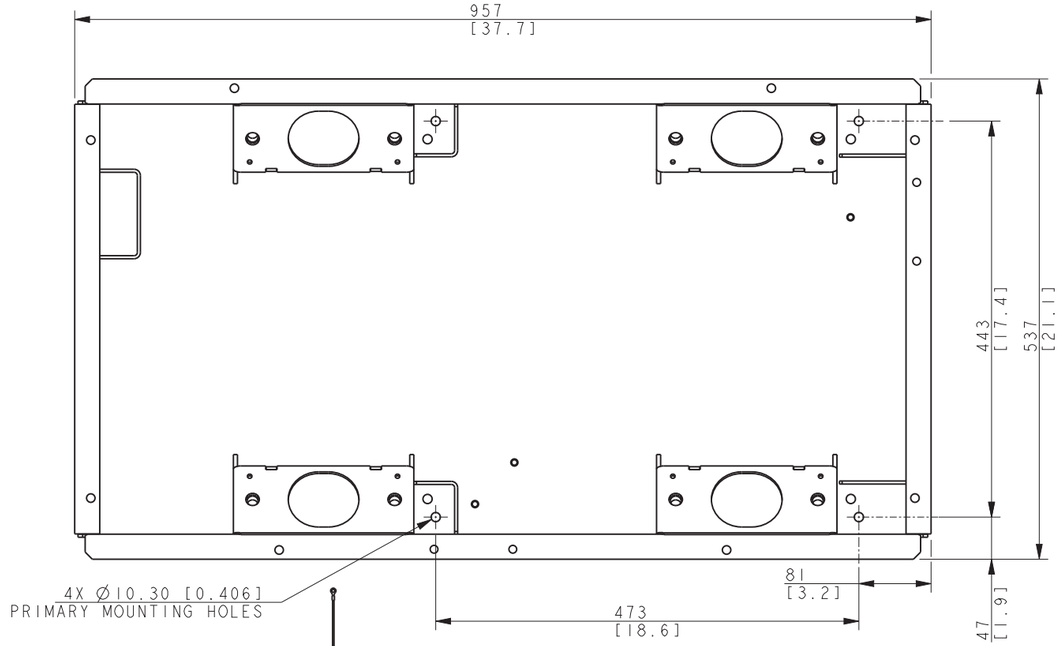

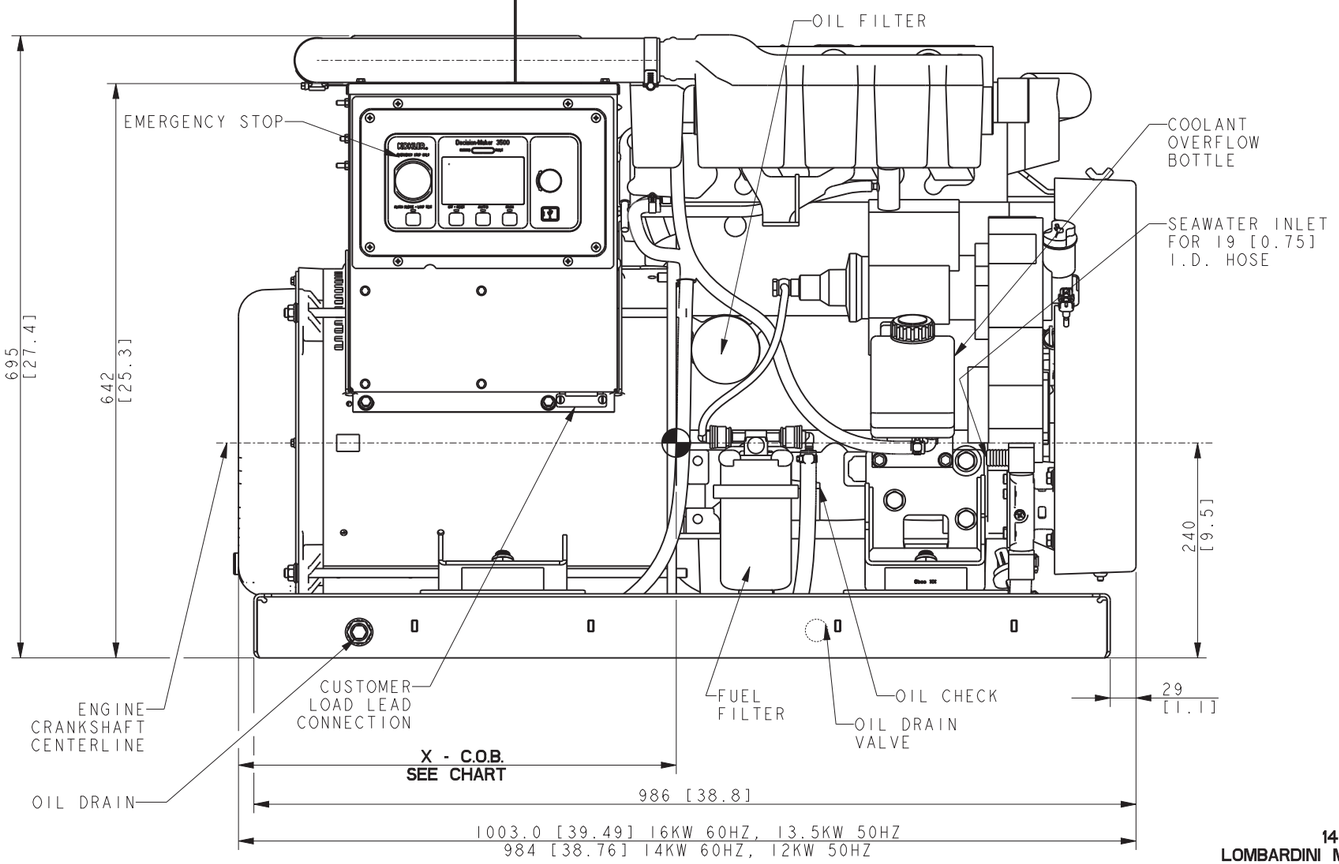

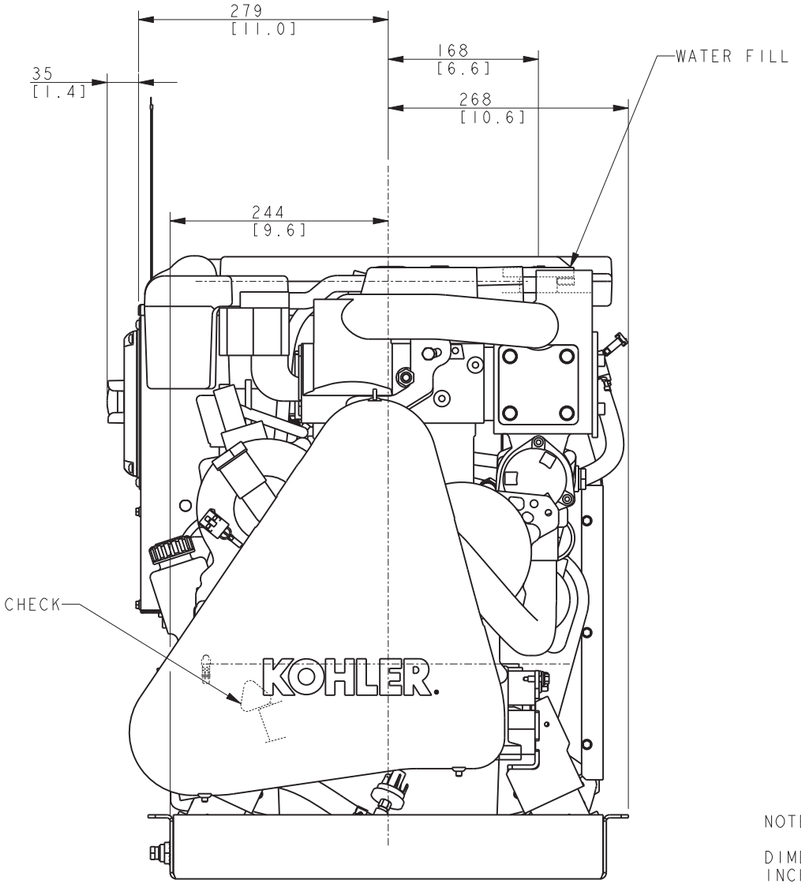

NOTE:

DIMENSIONS IN [] ARE INCH EQUIVALENTS.

14-16 KW
LOMBARDINI MARINE

REV	DATE	ON COMPOSITE DWGS, SEE PART NO. FOR REVISION LEVEL	BY
-	4-14-16	NEW DRAWING [CT144169]	RVM
A	22APR2024	(D-1,2,3) WEIGHT & COB DETAILS TABLE ADDED,	
		COB DIM. LOCATION NOTE ADDED; (A-7,8) ENGINE	
		CSCL NOTE ADDED, 'X- COB SEE CHART' ADDED	
		[CT235194]	MGH

UNLESS OTHERWISE SPECIFIED:-
1) DIMENSIONS ARE IN MILLIMETERS
2) TOLERANCES ARE:
X.XX ± 0.25
X.X ± 1.0
X ± 1.5
ANGLES ± 0° 30'
SURFACE FINISH MAX.
THIRD ANGLE PROJECTION

APPROVALS		DATE
DRAWN	RVM	4-14-16
CHECKED	DDH	4-14-16
APPROVED	TLW	4-14-16

KOHLER CO. METRIC PRO-E
POWER SYSTEMS, KOHLER, WI 53044 U.S.A.

THIS DRAWING IN DESIGN AND DETAIL IS KOHLER CO. PROPERTY AND MUST NOT BE USED EXCEPT IN CONNECTION WITH KOHLER CO. WORK. ALL RIGHTS OF DESIGN OR INVENTION ARE RESERVED.

DIMENSION PRINT, 14-16 KW KDI MARINE

SCALE 0.30 | CAD NO. | SHEET 1 of 2
DWG NO. **ADV-8880** | D

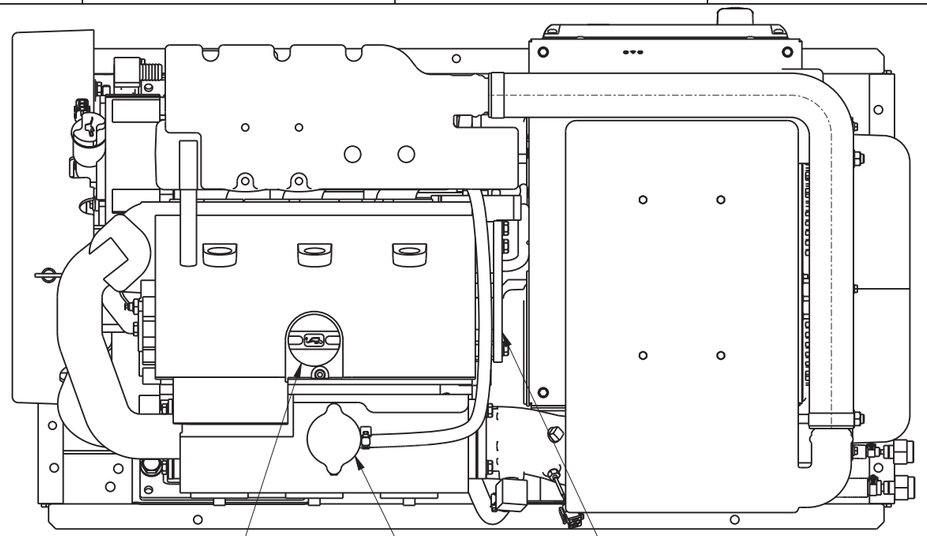

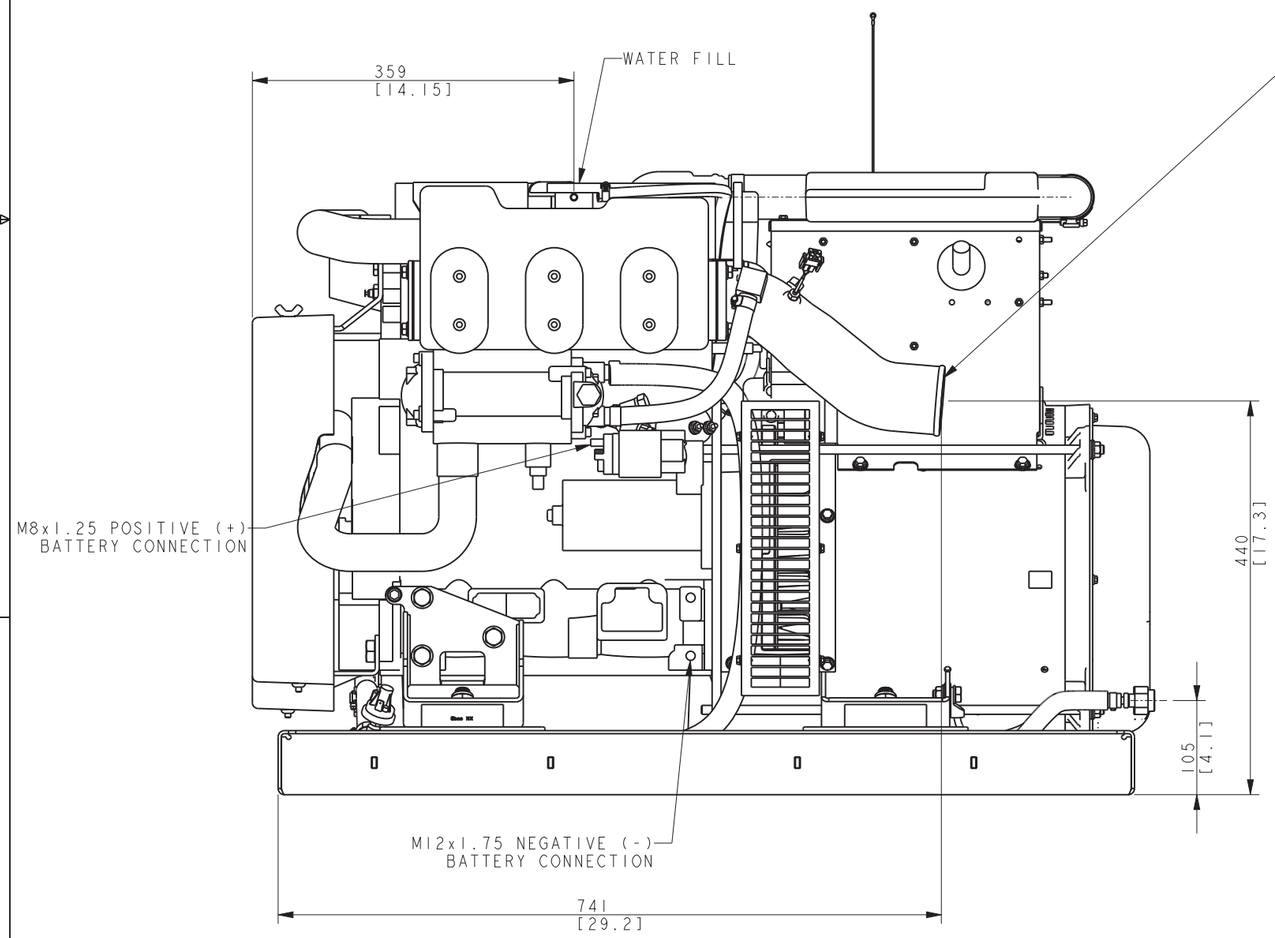

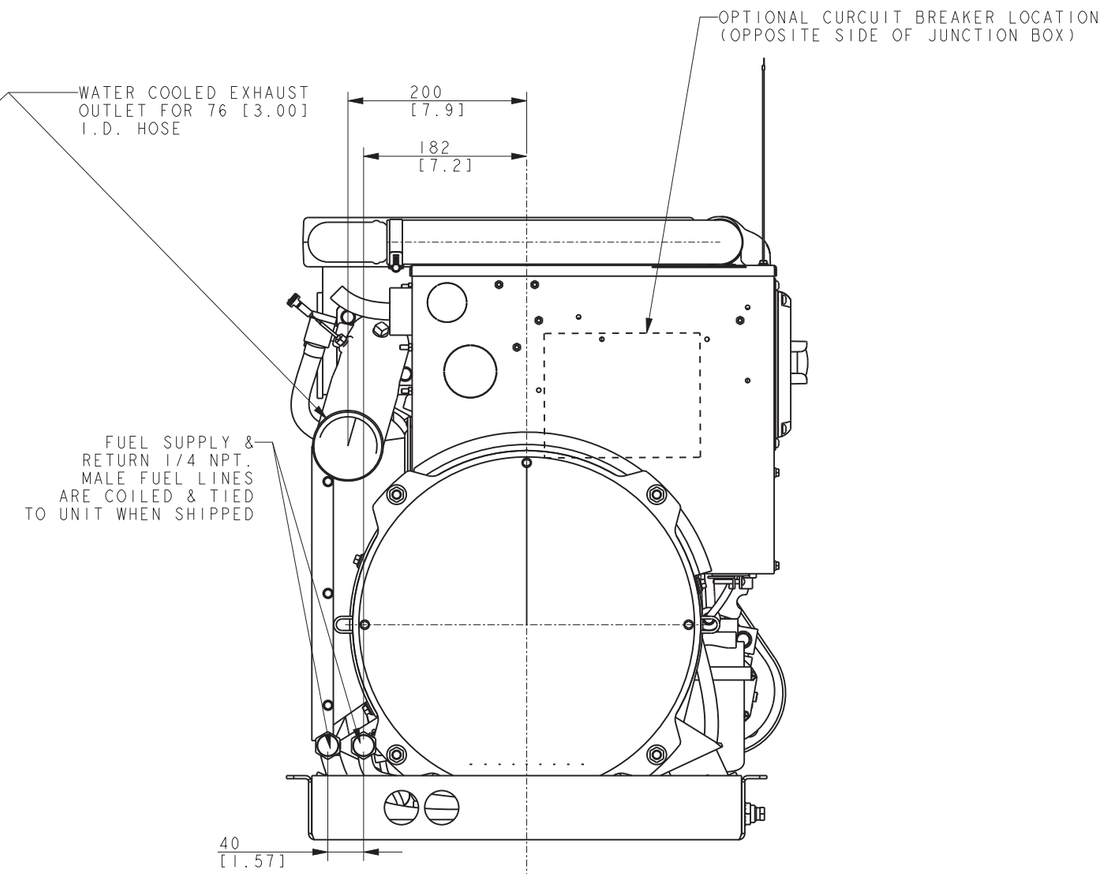

REV	DATE	ON COMPOSITE DWGS, SEE PART NO. FOR REVISION LEVEL	BY
-	4-14-16	NEW DRAWING [CT144169]	RVM
A	22APR2024	SEE SHEET 1 [CT235194]	MGH

UNLESS OTHERWISE SPECIFIED -
1) DIMENSIONS ARE IN MILLIMETERS
2) TOLERANCES ARE:
X.XX ± 0.25
X.X ± 1.0
X ± 1.5
ANGLES ± 0° 30'
SURFACE FINISH MAX.
THIRD ANGLE PROJECTION

APPROVALS		DATE
DRAWN	RVM	4-14-16
CHECKED	DDH	4-14-16
APPROVED	TLW	4-14-16

KOHLER CO. METRIC PRO-E

POWER SYSTEMS, KOHLER, WI 53044 U.S.A.

THIS DRAWING IN DESIGN AND DETAIL IS KOHLER CO. PROPERTY AND MUST NOT BE USED EXCEPT IN CONNECTION WITH KOHLER CO. WORK. ALL RIGHTS OF DESIGN OR INVENTION ARE RESERVED.

DIMENSION PRINT, 14-16 KW KDI MARINE

SCALE 0.30 | CAD NO. | SHEET 2 of 2

DWG NO. ADV-8880 | D