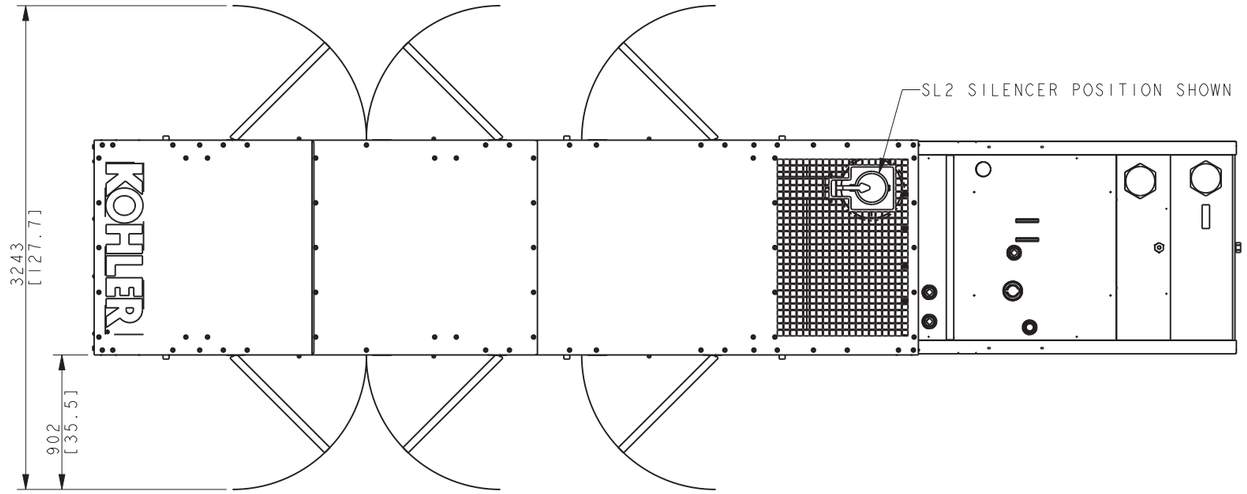

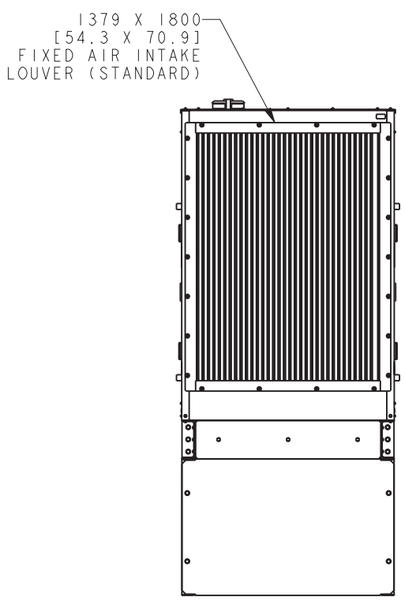

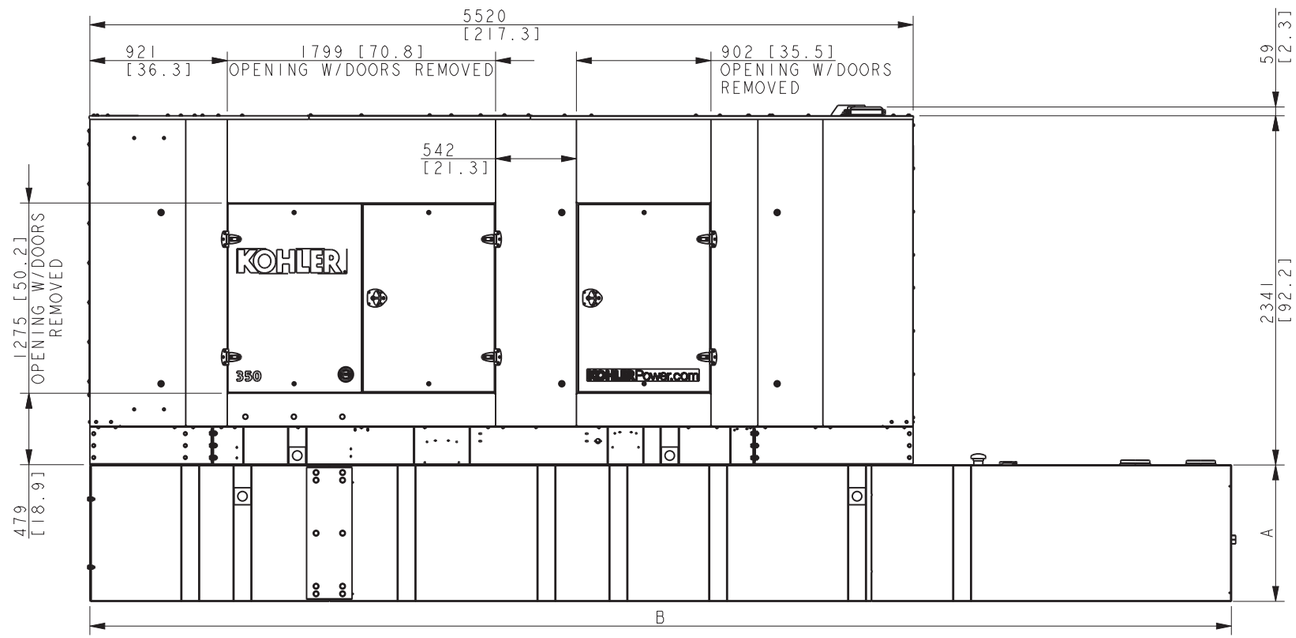

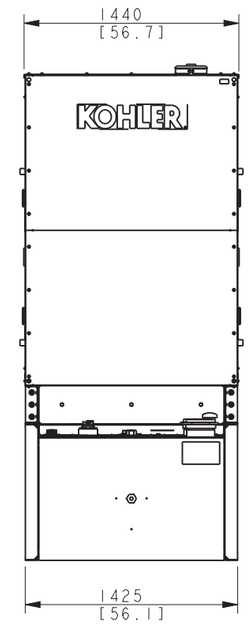

TANK INFORMATION

LITERS [GALLONS] MIN HOURS	GENSETS	DIM A MM [INCH]	DIM B MM [INCH]	TANK WEIGHT KG [LBS] (NO FUEL)
1530 [404] 12 HOURS	350-400KW	406.4 [16.0]	5760.8[226.8]	1110 [2446]
1771 [468] 12 HOURS	500KW	457.2 [18.0]	5760.8[226.8]	1158 [2554]
2930 [774] 24 HOURS	350-400KW	762.0 [30.0]	5760.8[226.8]	1401 [3089]
3384 [894] 24 HOURS	500KW	838.2 [33.0]	5760.8[226.8]	1484 [3271]
4394 [1161] 36 HOURS	350-400KW	914.4 [36.0]	6459.8[254.3]	1789 [3945]
5047 [1333] 36 HOURS	500KW	914.4 [36.0]	7094.8[279.3]	1986 [4379]
1530 [404] 12 HOURS STATE	350-400KW	381.0 [15.0]	6713.8[264.3]	1299 [2864]
1771 [468] 12 HOURS STATE	500KW	431.8 [17.0]	6713.8[264.3]	1333 [2939]
2930 [774] 24 HOURS STATE	350-400KW	660.4 [26.0]	6713.8[264.3]	1547 [3411]
3384 [894] 24 HOURS STATE	500KW	736.6 [29.0]	6713.8[264.3]	1630 [3594]
4394 [1161] 36 HOURS STATE	350-400KW	914.4 [36.0]	6891.6[271.3]	1847 [4072]
5047 [1333] 36 HOURS STATE	500KW	914.4 [36.0]	7653.6[301.3]	2094 [4616]

350-500 REOZJC/D	KG [LBS]
STEEL SOUND L2 ENCLOSURE WEIGHT	1000 [2205] APPROX
ALUM. SOUND L2 ENCLOSURE WEIGHT	590 [1300] APPROX
STEEL SOUND L1 ENCLOSURE WEIGHT	870 [1920] APPROX
ALUM. SOUND L1 ENCLOSURE WEIGHT	460 [1015] APPROX
STEEL WEATHER ENCLOSURE WEIGHT	850 [1875] APPROX

350-500KW REOZJC/D
STEEL & ALUMINUM ENCL.
12 - 36 HOUR TANKS

REV	DATE	ON COMPOSITE DWGS, SEE PART NO. FOR REVISION LEVEL	BY
-	25NOV2019	NEW DRAWING [CT200393]	YBY
A	17AUG2021	SEE SHEET 6 & 7 [CT214138]	RNN
B	1NOV2021	SHEET 8 ADDED; SEE SHEET 7 & 8 [CT215771]	SAK
C	14DEC2021	SHEET 9 & 10 ADDED [CT216616]	MVT

DO NOT SCALE. REFERENCE THE MODEL FOR ALL UNSPECIFIED DIMENSIONS

THIRD ANGLE PROJECTION

APPROVALS		DATE
DRAWN	YBY	25NOV2019
CHECKED	KJB	25NOV2019
APPROVED	DMS	25NOV2019

KOHLER.
KOHLER, WISCONSIN 53044

THIS DRAWING IN DESIGN AND DETAIL IS KOHLER CO. PROPERTY AND MUST NOT BE USED EXCEPT IN CONNECTION WITH KOHLER CO. WORK. ALL RIGHTS OF DESIGN OR INVENTION ARE RESERVED.

TITLE
DIMENSION PRINT,
350-500REOZJC/D ENCL & TANKS

SCALE 0.05 | CAD NO. | SHEET of 10

DWG NO. **ADV-9189** | **D**

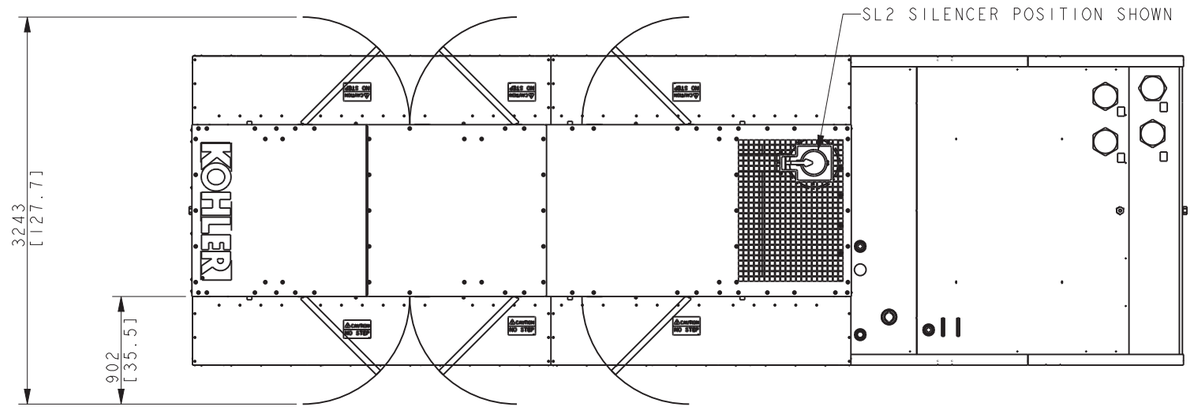

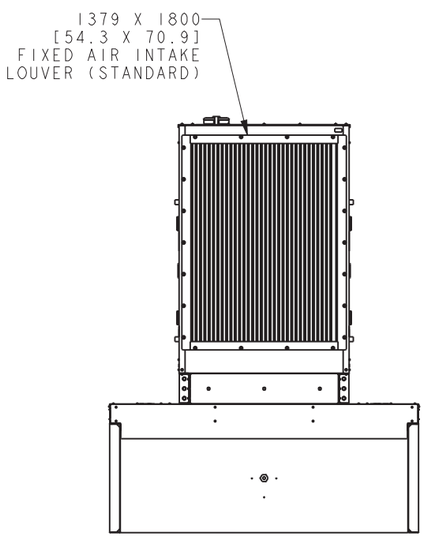

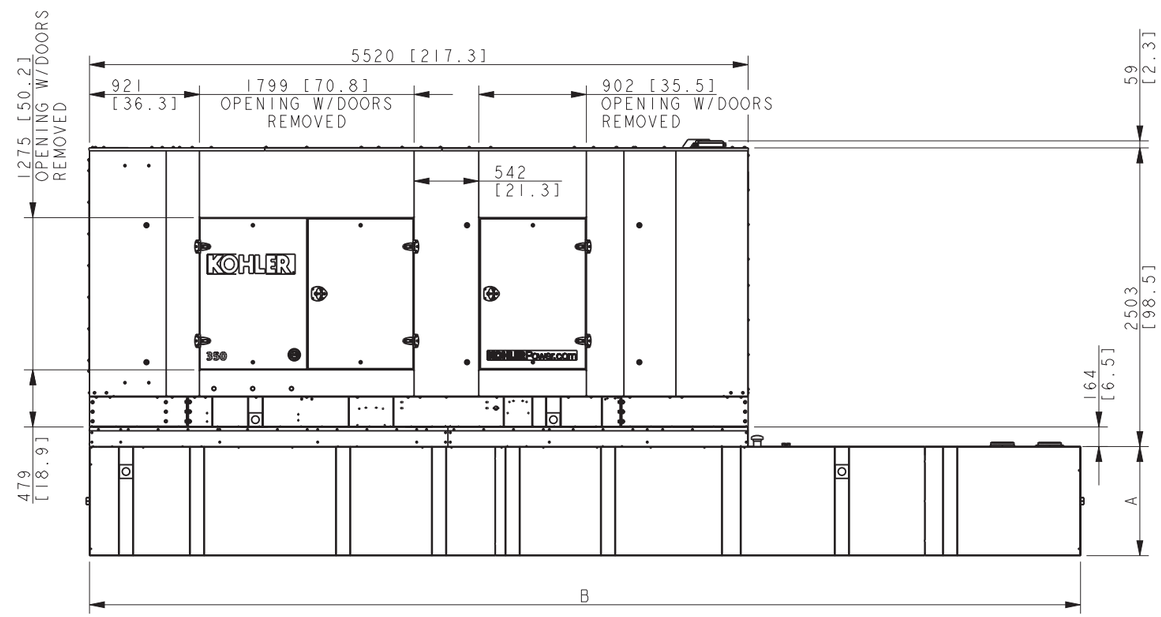

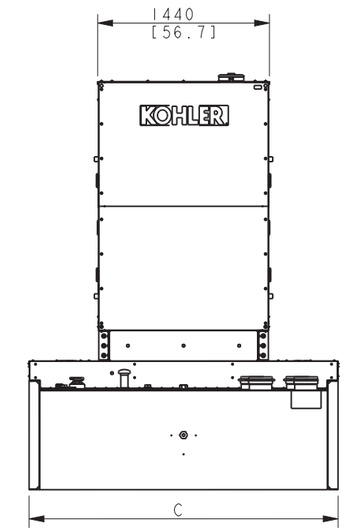

TANK INFORMATION

LITERS [GALLONS] MIN HOURS	GENSETS	DIM A MM [INCH]	DIM B MM [INCH]	DIM C MM [INCH]	TANK WEIGHT KG [LBS] (NO FUEL)
5042 [1332] 48 HOURS	350KW	711.2 [28.0]	5850.1 [230.3]	1981.2 [78.0]	2751 [6064]
5818 [1537] 48 HOURS	400KW	812.8 [32.0]	5850.1 [230.3]		2887 [6364]
6651 [1757] 48 HOURS	500KW	914.4 [36.0]	5850.1 [230.3]		3029 [6678]
5061 [1337] 48 HOURS STATE	350KW	635.0 [25.0]	6282 [247.3]		2910 [6416]
5852 [1546] 48 HOURS STATE	400KW	711.2 [28.0]	6282 [247.3]		3040 [6702]
6681 [1765] 48 HOURS STATE	500KW	812.8 [32.0]	6282 [247.3]		3184 [7020]
7510 [1984] 72 HOURS	350KW	762.0 [30.0]	5850.1 [230.3]	2590.8 [102.0]	3486 [7686]
8695 [2297] 72 HOURS	400KW	889.0 [35.0]	5850.1 [230.3]		3656 [8061]
9971 [2634] 72 HOURS	500KW	914.4 [36.0]	6028 [237.3]		4021 [8865]
7537 [1991] 72 HOURS STATE	350KW	660.4 [26.0]	6282 [247.3]		3729 [8222]
8748 [2311] 72 HOURS STATE	400KW	762.0 [30.0]	6282 [247.3]		3894 [8585]
9993 [2640] 72 HOURS STATE	500KW	863.6 [34.0]	6282 [247.3]		4063 [8958]
9993 [2640] 96 HOURS STATE	350KW		6282 [247.3]		4063 [8958]
11602 [3065] 96 HOURS STATE	400KW		7264.4 [286.0]		4426 [9758]
13325 [3520] 96 HOURS STATE	500KW		8305.8 [327.0]		4862 [10719]

350-500 REOZJC/D	KG [LBS]
STEEL SOUND L2 ENCLOSURE WEIGHT	1000 [2205] APPROX
ALUM. SOUND L2 ENCLOSURE WEIGHT	590 [1300] APPROX
STEEL SOUND L1 ENCLOSURE WEIGHT	870 [1920] APPROX
ALUM. SOUND L1 ENCLOSURE WEIGHT	460 [1015] APPROX
STEEL WEATHER ENCLOSURE WEIGHT	850 [1875] APPROX

350-500KW REOZJC/D
STEEL & ALUMINUM ENCL.
48 - 96 HOUR TANKS

REV	DATE	ON COMPOSITE DWGS, SEE PART NO. FOR REVISION LEVEL	BY
-	25NOV2019	NEW DRAWING [CT200393]	YBY
A	17AUG2021	SEE SHEET 6 & 7 [CT214138]	RNN
B	1NOV2021	SEE SHEET 7 & 8 [CT215771]	SAK
C	14DEC2021	SEE SHEET 1, 9 & 10 [CT216616]	MVT

DO NOT SCALE. REFERENCE THE MODEL FOR ALL UNSPECIFIED DIMENSIONS

THIRD ANGLE PROJECTION

APPROVALS		DATE
DRAWN	YBY	25NOV2019
CHECKED	KJB	25NOV2019
APPROVED	DMS	25NOV2019

KOHLER.
KOHLER, WISCONSIN 53044

THIS DRAWING IN DESIGN AND DETAIL IS KOHLER CO. PROPERTY AND MUST NOT BE USED EXCEPT IN CONNECTION WITH KOHLER CO. WORK. ALL RIGHTS OF DESIGN OR INVENTION ARE RESERVED.

TITLE
DIMENSION PRINT,
350-500REOZJC/D ENCL & TANKS

SCALE 0.04 | CAD NO. | SHEET 2 of 10
DWG NO. **ADV-9189** | **D**

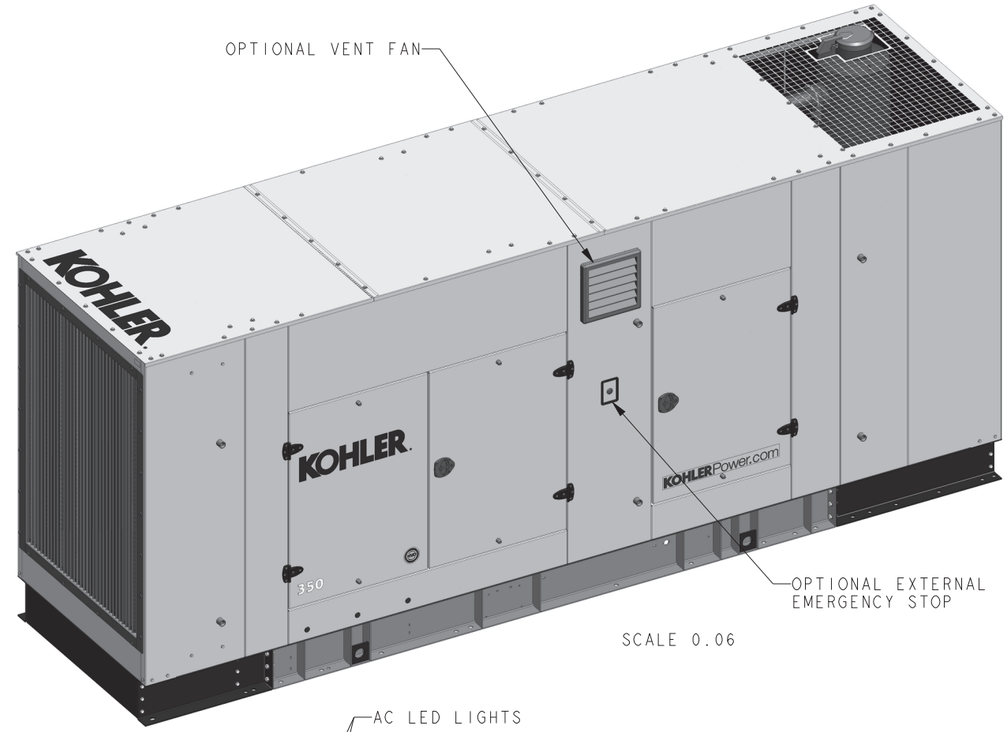

SCALE 0.06

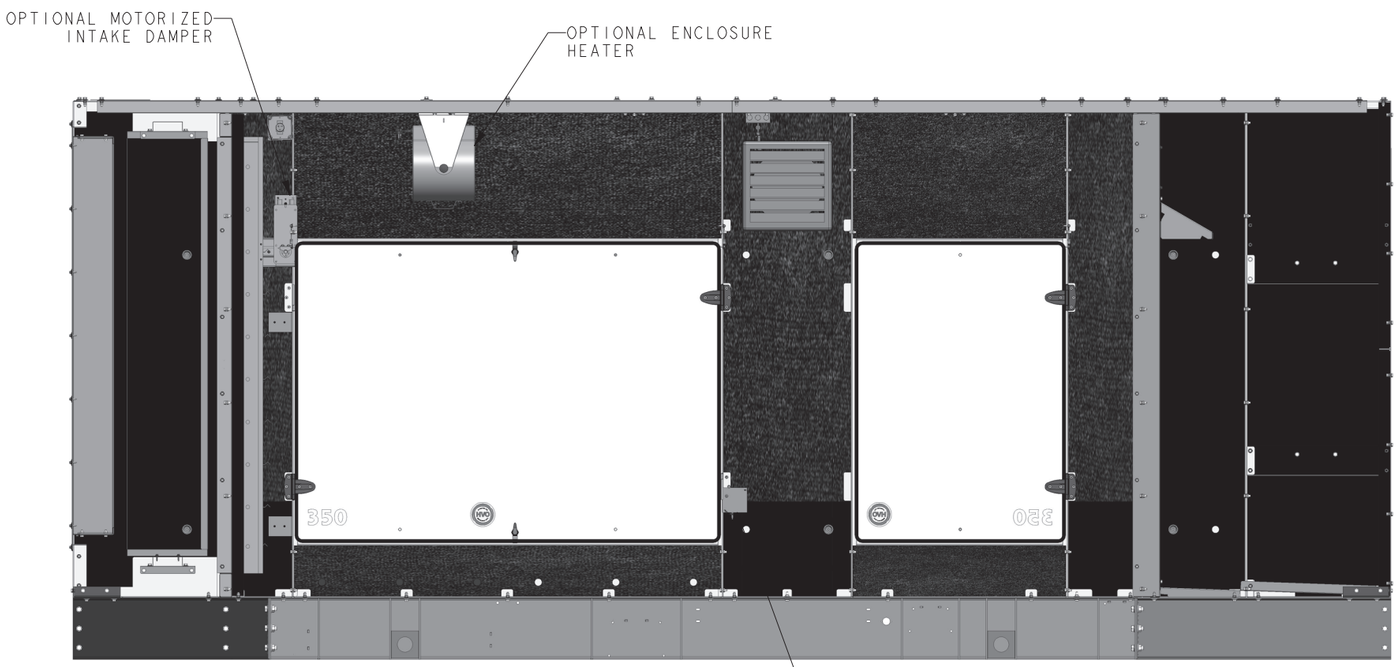

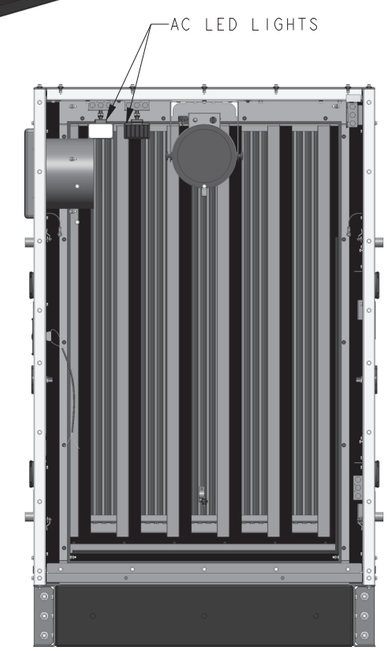

REV	DATE	ON COMPOSITE DWGS, SEE PART NO. FOR REVISION LEVEL	BY
-	25NOV2019	NEW DRAWING [CT200393]	YBY
A	17AUG2021	SEE SHEET 6 & 7 [CT214138]	RNN
B	1NOV2021	SEE SHEET 7 & 8 [CT215771]	SAK
C	14DEC2021	SEE SHEET 1, 9 & 10 [CT216616]	MVT

DO NOT SCALE. REFERENCE THE MODEL FOR ALL UNSPECIFIED DIMENSIONS

THIRD ANGLE PROJECTION

APPROVALS		DATE
DRAWN	YBY	25NOV2019
CHECKED	KJB	25NOV2019
APPROVED	DMS	25NOV2019

KOHLER.
KOHLER, WISCONSIN 53044

THIS DRAWING IN DESIGN AND DETAIL IS KOHLER CO. PROPERTY AND MUST NOT BE USED EXCEPT IN CONNECTION WITH KOHLER CO. WORK. ALL RIGHTS OF DESIGN OR INVENTION ARE RESERVED.

TITLE
DIMENSION PRINT, 350-500REOZJC/D ENCL & TANKS

SCALE 0.08 | CAD NO. | SHEET 3 of 10

DWG NO. **ADV-9189** | **D**

350-500KW REOZJC/D
ENCLOSURE OPTIONAL ACCESSORIES

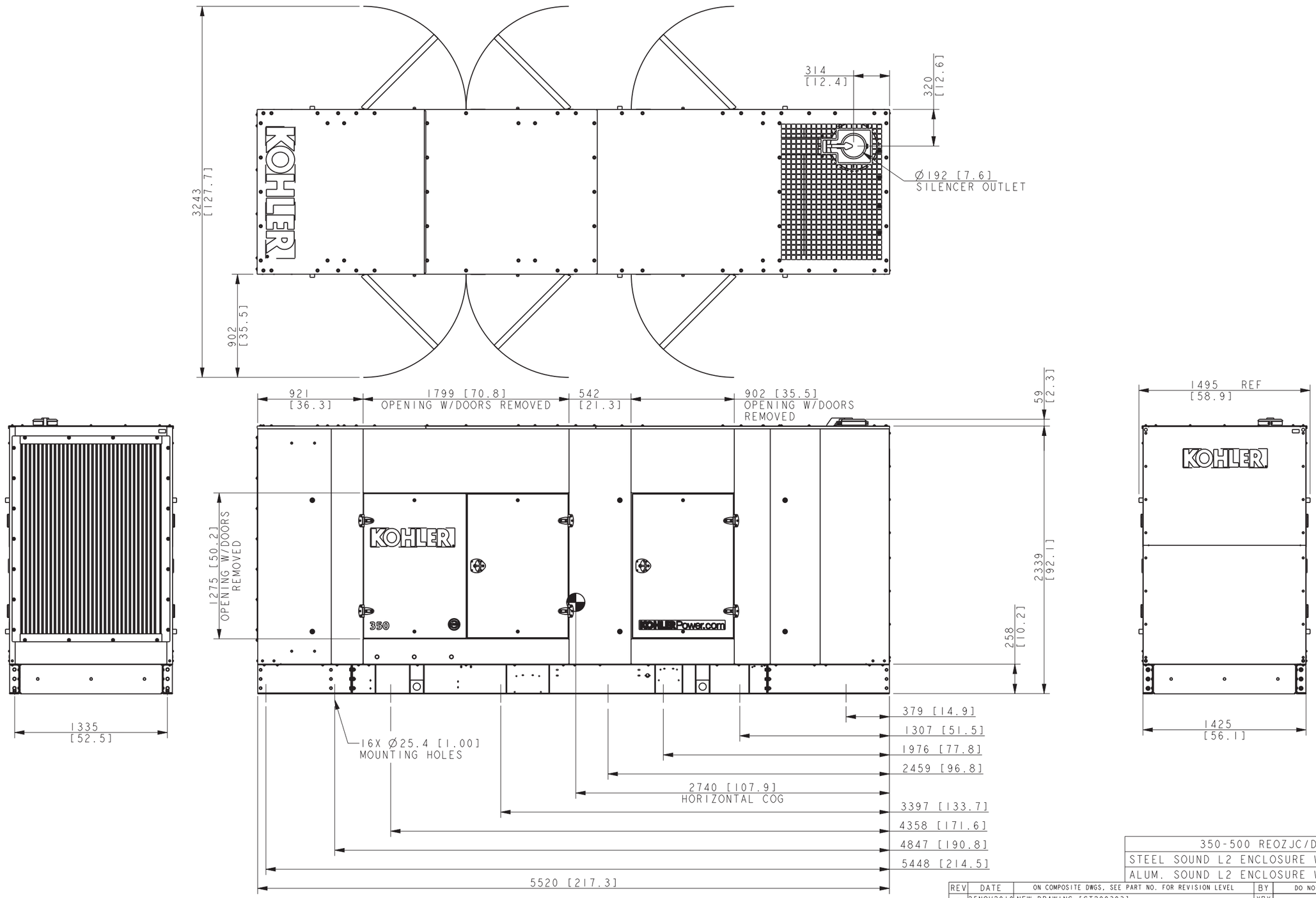

350-500 REOZJC/D	KG [LBS]
STEEL SOUND L2 ENCLOSURE WEIGHT	1000 [2205] APPROX
ALUM. SOUND L2 ENCLOSURE WEIGHT	590 [1300] APPROX

REV	DATE	ON COMPOSITE DWGS, SEE PART NO. FOR REVISION LEVEL	BY
-	25NOV2019	NEW DRAWING [CT200393]	YBY
A	17AUG2021	SEE SHEET 6 & 7 [CT214138]	RNN
B	1NOV2021	SEE SHEET 7 & 8 [CT215771]	SAK
C	14DEC2021	SEE SHEET 1, 9 & 10 [CT216616]	MVT

DO NOT SCALE. REFERENCE THE MODEL FOR ALL UNSPECIFIED DIMENSIONS

THIRD ANGLE PROJECTION

APPROVALS		DATE
DRAWN	YBY	25NOV2019
CHECKED	KJB	25NOV2019
APPROVED	DMS	25NOV2019

KOHLER.
KOHLER, WISCONSIN 53044

THIS DRAWING IN DESIGN AND DETAIL IS KOHLER CO. PROPERTY AND MUST NOT BE USED EXCEPT IN CONNECTION WITH KOHLER CO. WORK. ALL RIGHTS OF DESIGN OR INVENTION ARE RESERVED.

TITLE
DIMENSION PRINT, 350-500REOZJC/D ENCL & TANKS

SCALE 0.06 | CAD NO. | SHEET 4 of 10

DWG NO. ADV-9189 | D

350-500KW REOZJC/D
STEEL & ALUMINUM SL2 ENCL.

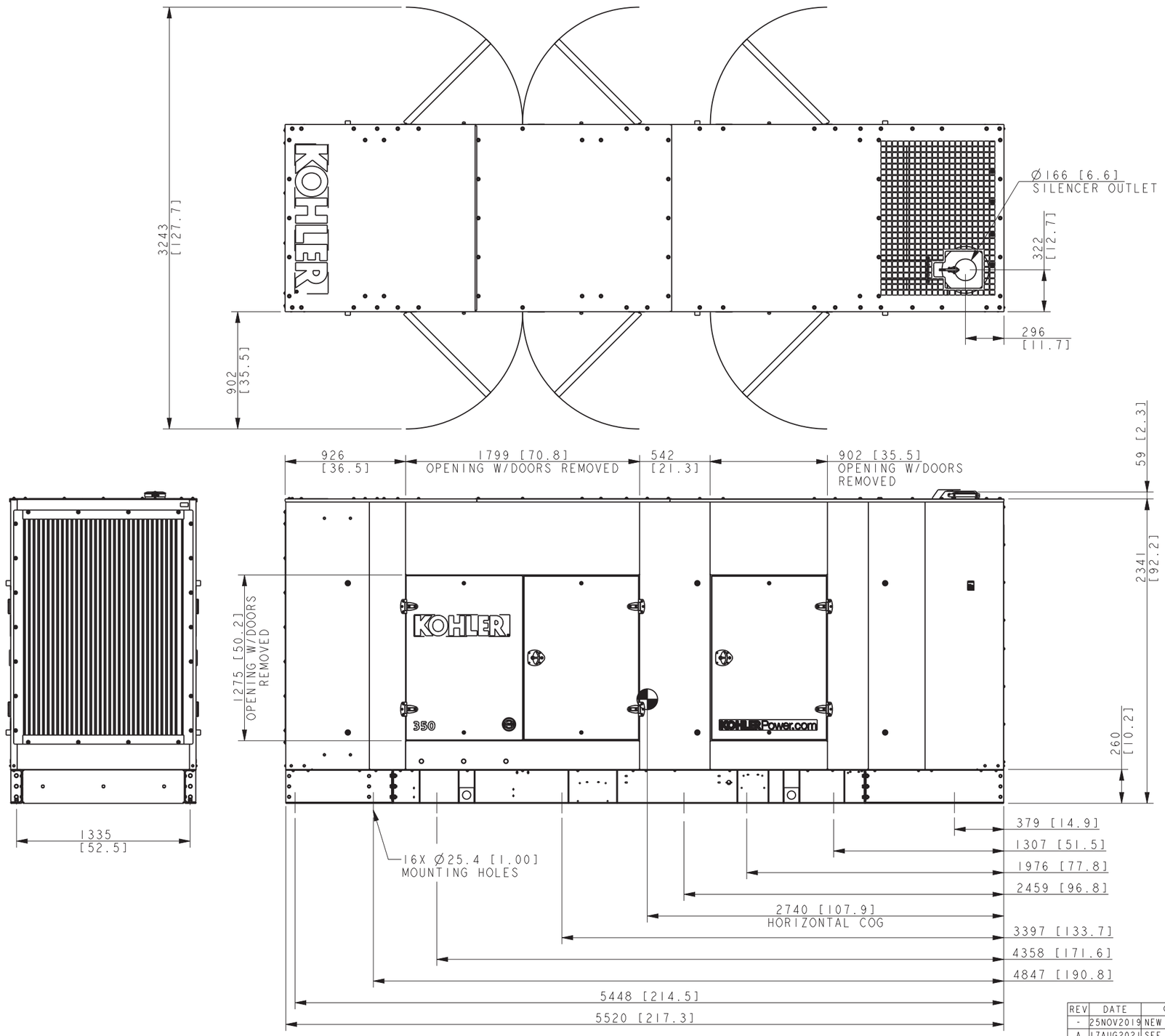

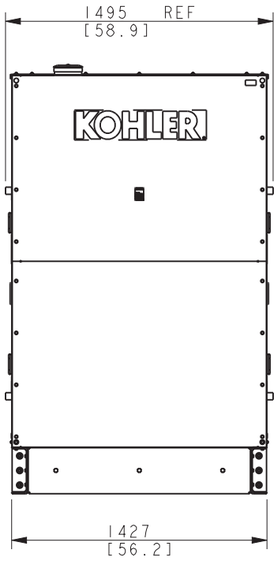

350-500 REOZJC/D	KG [LBS]
STEEL SOUND L1 ENCLOSURE WEIGHT	870 [1920] APPROX
ALUM. SOUND L1 ENCLOSURE WEIGHT	460 [1015] APPROX
STEEL WEATHER ENCLOSURE WEIGHT	850 [1875] APPROX

REV	DATE	ON COMPOSITE DWGS, SEE PART NO. FOR REVISION LEVEL	BY
-	25NOV2019	NEW DRAWING [CT200393]	YBY
A	17AUG2021	SEE SHEET 6 & 7 [CT214138]	RNN
B	1NOV2021	SEE SHEET 7 & 8 [CT215771]	SAK
C	14DEC2021	SEE SHEET 1, 9 & 10 [CT216616]	MVT

DO NOT SCALE. REFERENCE THE MODEL FOR ALL UNSPECIFIED DIMENSIONS

THIRD ANGLE PROJECTION

APPROVALS		DATE
DRAWN	YBY	25NOV2019
CHECKED	KJB	25NOV2019
APPROVED	DMS	25NOV2019

KOHLER.
KOHLER, WISCONSIN 53044

THIS DRAWING IN DESIGN AND DETAIL IS KOHLER CO. PROPERTY AND MUST NOT BE USED EXCEPT IN CONNECTION WITH KOHLER CO. WORK. ALL RIGHTS OF DESIGN OR INVENTION ARE RESERVED.

TITLE
DIMENSION PRINT, 350-500REOZJC/D ENCL & TANKS

SCALE 0.06 | CAD NO. | SHEET 5 of 10

DWG NO. ADV-9189 | D

350-500KW REOZJC/D
STEEL & ALUMINUM SL1 ENCL.
STEEL WEATHER ENCL.

TANK INFORMATION

LITERS [GALLONS] MIN HOURS	GENSETS	DIM A MM [INCH]	DIM B MM [INCH]	M	N	P	Q	R	S	T	V	W	X
1530 [404] 12 HOURS	350-400KW	406.4 [16.0]	5760.8 [226.8]	66.3 [2.61]	606.8 [23.89]	488.5 [19.23]	961.7 [37.86]	937.9 [36.93]	482.6 [19.00]	668.6 [26.32]	931.5 [36.67]	931.5 [36.67]	523.9 [20.63]
1771 [468] 12 HOURS	500KW	457.2 [18.0]	5760.8 [226.8]										
2930 [774] 24 HOURS	350-400KW	762.0 [30.0]	5760.8 [226.8]										
3384 [894] 24 HOURS	500KW	838.2 [33.0]	5760.8 [226.8]										
4394 [1161] 36 HOURS	350-400KW	914.4 [36.0]	6459.8 [254.3]									574.6 [22.62]	648.3 [25.52]
5047 [1333] 36 HOURS	500KW	914.4 [36.0]	7094.8 [279.3]									577.0 [22.72]	576.6 [22.70]
1530 [404] 12 HOURS STATE	350-400KW	381.0 [15.0]	6713.8 [264.3]									664.2 [26.15]	812.7 [32.00]
1771 [468] 12 HOURS STATE	500KW	431.8 [17.0]	6713.8 [264.3]										
2930 [774] 24 HOURS STATE	350-400KW	660.4 [26.0]	6713.8 [264.3]									704.3 [27.73]	772.6 [30.42]
3384 [894] 24 HOURS STATE	500KW	736.6 [29.0]	6713.8 [264.3]										
4394 [1161] 36 HOURS STATE	350-400KW	914.4 [36.0]	6891.6 [271.3]										950.4 [37.42]
5047 [1333] 36 HOURS STATE	500KW	914.4 [36.0]	7653.6 [301.3]									891.3 [35.09]	821.1 [32.33]

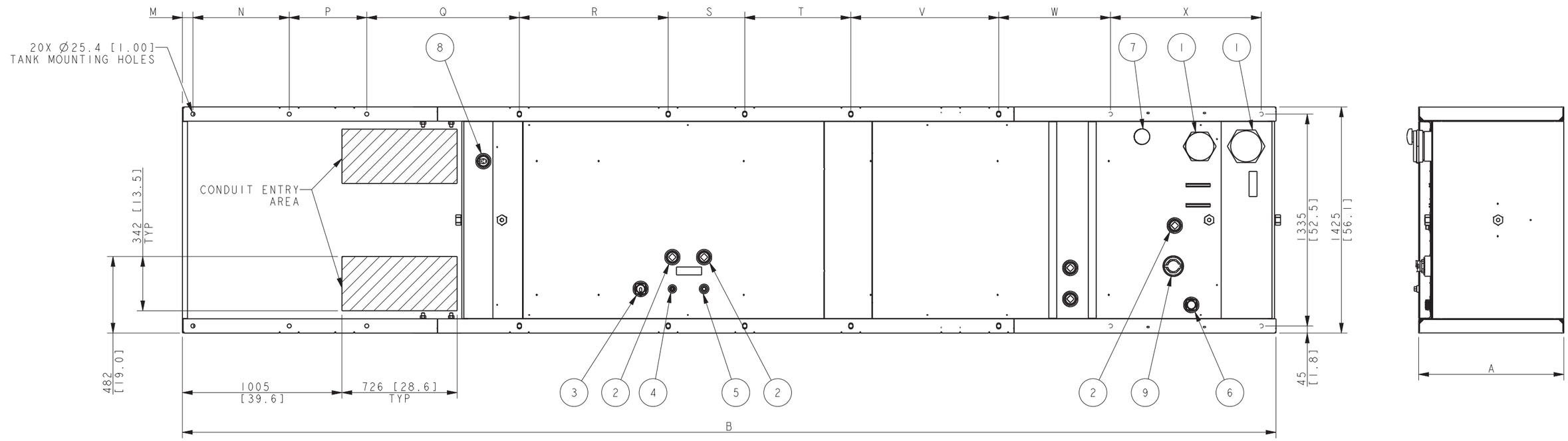

4396 [1161 GAL.] 36 HOUR STATE TANK SHOWN.

ITEM	DESCRIPTION
9	FILL CAP, 2" LOCKABLE W/PIPE RISER
8	SWITCH, FUEL IN BASIN TOP MTD, 2"
7	VENT, NORMAL
6	GAUGE, FUEL LEVEL, DIRECT READ
5	RETURN, FUEL (3/4" NPT)
4	SUPPLY, FUEL (1/2" NPT)
3	GAUGE, FUEL LEVEL, W/ SENDER
2	PLUG, PIPE (2" NPT)
1	CAP, EMERGENCY VENT

REV	DATE	ON COMPOSITE DWGS, SEE PART NO. FOR REVISION LEVEL	BY
-	25NOV2019	NEW DRAWING [CT200393]	YBY
A	17AUG2021	(C-8) 20X Ø25.4 [1.00] ADDED, SEE SHEET 7	
		[CT214138]	RNN
B	1NOV2021	SEE SHEET 7 & 8 [CT215771]	SAK
C	14DEC2021	SEE SHEET 1, 9 & 10 [CT216616]	MVT

DO NOT SCALE. REFERENCE THE MODEL FOR ALL UNSPECIFIED DIMENSIONS

THIRD ANGLE PROJECTION

APPROVALS		DATE
DRAWN	YBY	25NOV2019
CHECKED	KJB	25NOV2019
APPROVED	DMS	25NOV2019

KOHLER.
KOHLER, WISCONSIN 53044

THIS DRAWING IN DESIGN AND DETAIL IS KOHLER CO. PROPERTY AND MUST NOT BE USED EXCEPT IN CONNECTION WITH KOHLER CO. WORK. ALL RIGHTS OF DESIGN OR INVENTION ARE RESERVED.

TITLE
DIMENSION PRINT, 350-500REOZJC/D ENCL & TANKS

SCALE 0.08 | CAD NO. | SHEET 6 of 10

DWG NO. **ADV-9189** | D

350-500KW REOZJC/D ENCLOSED
12 - 36 HOUR TANKS

TANK INFORMATION

LITERS [GALLONS] MIN HOURS	GENSETS	DIM A MM [INCH]	DIM B MM [INCH]	DIM C MM [INCH]	DIM D MM [INCH]	TANK WEIGHT KG [LBS] (NO FUEL)	M	N	P	Q	R	S	T	U	V	W	X	Y
5042 [1332] 48 HOURS	350KW	711.2 [28.0]	5850.1 [230.3]	1981.2 [78.0]	816.1 [32.1]	2751 [6064]	305.8 [12.0]	595.1 [23.4]	575.0 [22.6]	649.5 [25.6]	804.0 [31.7]	616.5 [24.3]	800.1 [31.5]	515.0 [20.3]	518.3 [20.4]	840.6 [33.10]	-	-
5818 [1537] 48 HOURS	400KW	812.8 [32.0]	5850.1 [230.3]			2887 [6364]												
6651 [1757] 48 HOURS	500KW	914.4 [36.0]	5850.1 [230.3]			3029 [6678]												
5061 [1337] 48 HOURS STATE	350KW	635.0 [25.0]	6282.0 [247.3]			2953 [6510]												
5852 [1546] 48 HOURS STATE	400KW	711.2 [28.0]	6282.0 [247.3]			3077 [6784]												
6681 [1765] 48 HOURS STATE	500KW	812.8 [32.0]	6282.0 [247.3]			3214 [7087]												

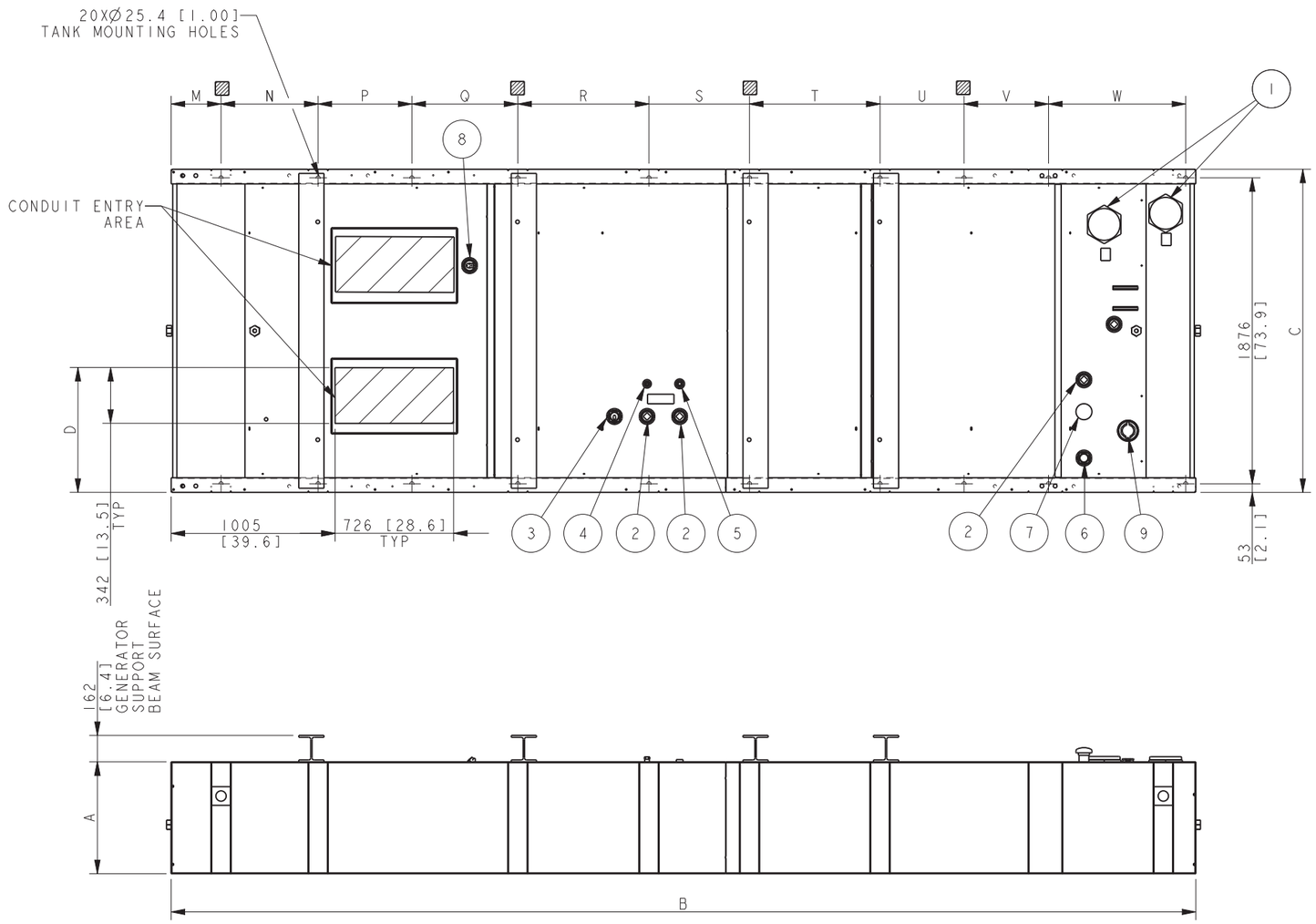

6681 [1765 GAL.] 48 HOUR STATE TANK SHOWN.

GROUND CLEARANCE I-BEAM MOUNTING HOLE

ITEM	DESCRIPTION
9	FILL CAP, 2" LOCKABLE W/PIPE RISER
8	SWITCH, FUEL IN BASIN TOP MTD, 2"
7	VENT, NORMAL
6	GAUGE, FUEL LEVEL, DIRECT READ
5	RETURN, FUEL (3/4" NPT)
4	SUPPLY, FUEL (1/2" NPT)
3	GAUGE, FUEL LEVEL, W/ SENDER
2	PLUG, PIPE (2" NPT)
1	CAP, EMERGENCY VENT

REV	DATE	ON COMPOSITE DWGS, SEE PART NO. FOR REVISION LEVEL	BY
B	1NOV2021	72 HOURS AND 92 HOURS TANKS MOVED ON SHEET 8; 48 HOURS TANK VIEWS ADDED; (D-4) DIM W ADDED & TABLE UPDATED FOR W; SEE SHEET 8 [CT215771]	SAK
C	14DEC2021	SEE SHEET 1, 9 & 10 [CT216616]	MVT

DO NOT SCALE. REFERENCE THE MODEL FOR ALL UNSPECIFIED DIMENSIONS

THIRD ANGLE PROJECTION

APPROVALS		DATE
DRAWN	YBY	25NOV2019
CHECKED	KJB	25NOV2019
APPROVED	DMS	25NOV2019

KOHLER.
KOHLER, WISCONSIN 53044

THIS DRAWING IN DESIGN AND DETAIL IS KOHLER CO. PROPERTY AND MUST NOT BE USED EXCEPT IN CONNECTION WITH KOHLER CO. WORK. ALL RIGHTS OF DESIGN OR INVENTION ARE RESERVED.

TITLE: DIMENSION PRINT, 350-500REOZJC/D ENCL & TANKS

SCALE 0.05 | CAD NO. | SHEET of 10

DWG NO. ADV-9189 | D

350-500KW REOZJC/D ENCLOSED 48 HOUR TANKS

TANK INFORMATION

LITERS [GALLONS] MIN HOURS	GENSETS	DIM A MM [INCH]	DIM B MM [INCH]	DIM C MM [INCH]	DIM D MM [INCH]	TANK WEIGHT KG [LBS] (NO FUEL)	M	N	P	Q	R	S	T	U	V	W	X	Y
7510 [1984] 72 HOURS	350KW	762.0 [30.0]	5850.1 [230.3]	2590.8 [102.0]	1120.9 [44.13]	3486 [7686]	305.8 [12.0]	595.1 [23.4]	575.0 [22.6]	649.5 [25.6]	804.0 [31.7]	616.5 [24.3]	800.1 [31.5]	515.0 [20.3]	518.3 [20.4]	-	-	-
8695 [2297] 72 HOURS	400KW	889.0 [35.0]	5850.1 [230.3]			3656 [8061]												
9971 [2634] 72 HOURS	500KW	914.4 [36.0]	6028.0 [237.3]			3901 [8600]												
7537 [1991] 72 HOURS STATE	350KW	660.4 [26.0]	6282.0 [247.3]			3263 [7193]												
8748 [2311] 72 HOURS STATE	400KW	762.0 [30.0]	6282.0 [247.3]			3415 [7529]												
9993 [2640] 72 HOURS STATE	500KW	863.6 [34.0]	6282.0 [247.3]			4063 [8958]												
9993 [2640] 96 HOURS STATE	350KW		6282.0 [247.3]			4063 [8958]												
11602 [3065] 96 HOURS STATE	400KW		7264.4 [286.0]			4426 [9758]										926.5 [36.5]	465.0 [18.3]	442.2 [17.4]
13325 [3520] 96 HOURS STATE	500KW		8305.8 [327.0]			4863 [10720]											907.2 [35.7]	589.2 [23.2]

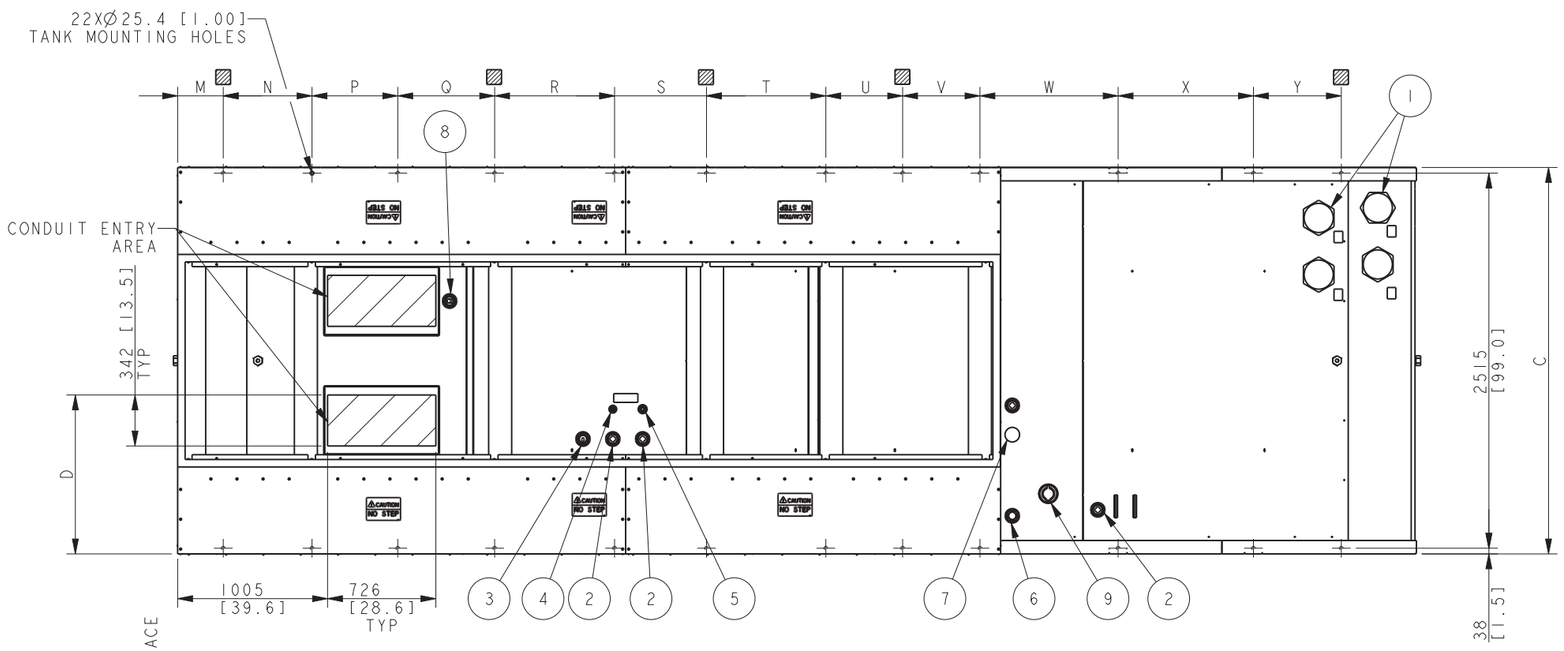

13325 [3520 GAL.] 96 HOUR STATE TANK SHOWN.

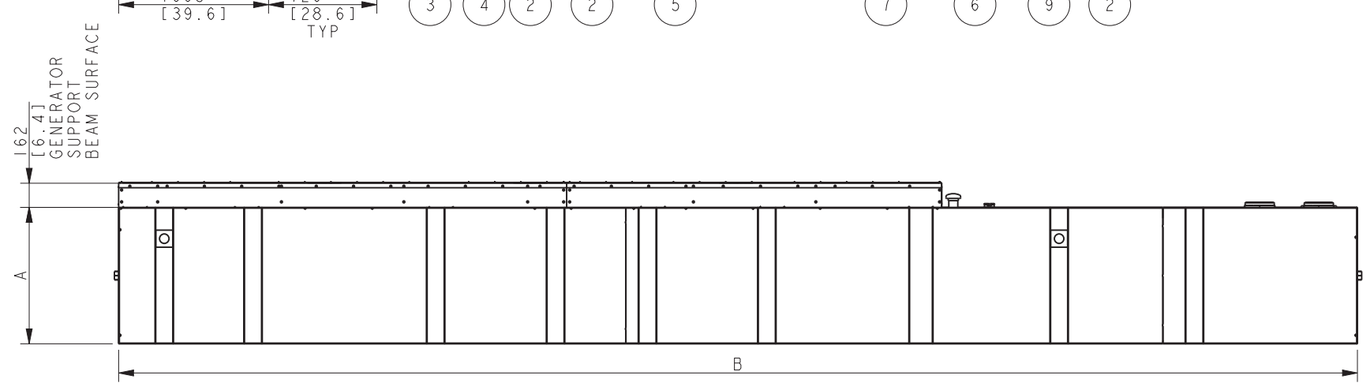

GROUND CLEARANCE I-BEAM MOUNTING HOLE

ITEM	DESCRIPTION
9	FILL CAP, 2" LOCKABLE W/PIPE RISER
8	SWITCH, FUEL IN BASIN TOP MTD, 2"
7	VENT, NORMAL
6	GAUGE, FUEL LEVEL, DIRECT READ
5	RETURN, FUEL (3/4" NPT)
4	SUPPLY, FUEL (1/2" NPT)
3	GAUGE, FUEL LEVEL, W/ SENDER
2	PLUG, PIPE (2" NPT)
1	CAP, EMERGENCY VENT

REV	DATE	ON COMPOSITE DWGS, SEE PART NO. FOR REVISION LEVEL	BY
-	25NOV2019	NEW DRAWING [CT200393]	YBY
A	17AUG2021	(C-8) Ø25.4 [1.00] ADDED; (D-5) DIM D COLUMN	
		ADDED; (B-8) 1066 REMOVED AND UPDATED IN	
		TABLE, SEE SHEET 6 [CT214138]	RNN
B	1NOV2021	72 HOURS AND 92 HOURS TANKS VIEWS ADDED FROM	
		SHEET 7 [CT215771]	SAK
C	14DEC2021	SEE SHEET 1, 9 & 10 [CT216616]	MVT

DO NOT SCALE. REFERENCE THE MODEL FOR ALL UNSPECIFIED DIMENSIONS

THIRD ANGLE PROJECTION

APPROVALS		DATE
DRAWN	YBY	25NOV2019
CHECKED	KJB	25NOV2019
APPROVED	DMS	25NOV2019

KOHLER.
KOHLER, WISCONSIN 53044

THIS DRAWING IN DESIGN AND DETAIL IS KOHLER CO. PROPERTY AND MUST NOT BE USED EXCEPT IN CONNECTION WITH KOHLER CO. WORK. ALL RIGHTS OF DESIGN OR INVENTION ARE RESERVED.

TITLE
DIMENSION PRINT, 350-500REOZJC/D ENCL & TANKS

SCALE 0.05 | CAD NO. | SHEET 8 of 10
DWG NO. ADV-9189 | D

350-500KW REOZJC/D ENCLOSED
96 HOUR TANKS

TANK W/OPEN UNIT

LITERS [GALLONS] MIN HOURS	GENSETS	WEIGHT KG [LBS]	A	B	R	S	U	V	W	X	Y	Z	ZA	ZB
1530 [404] 12 HOURS	350-400KW	1110 [2446]	406.4 [16.0]	4939.2 [194.4]	83.1 [3.27]	1217.6 [47.94]	937.9 [36.93]	482.6 [19.00]	668.6 [26.32]	931.5 [36.67]	523.9 [20.63]	-	-	-
1771 [468] 12 HOURS	500KW	1158 [2554]	457.2 [18.0]											
2930 [774] 24 HOURS	350-400KW	1401 [3089]	762.0 [30.0]											
3384 [894] 24 HOURS	500KW	1484 [3271]	838.2 [33.0]											
4394 [1161] 36 HOURS	350-400KW	1789 [3945]	914.4 [36.0]	5637.2 [221.9]							574.6 [22.62]	648.3 [25.52]		
5046 [1333] 36 HOURS	500KW	1986 [4379]	914.4 [36.0]	7094.8 [279.3]	83.1 [3.27]	2040.2 [80.32]	937.9 [36.93]	482.6 [19.00]	668.6 [26.32]	931.5 [36.67]	704.3 [27.73]	577.0 [22.72]	576.6 [22.70]	

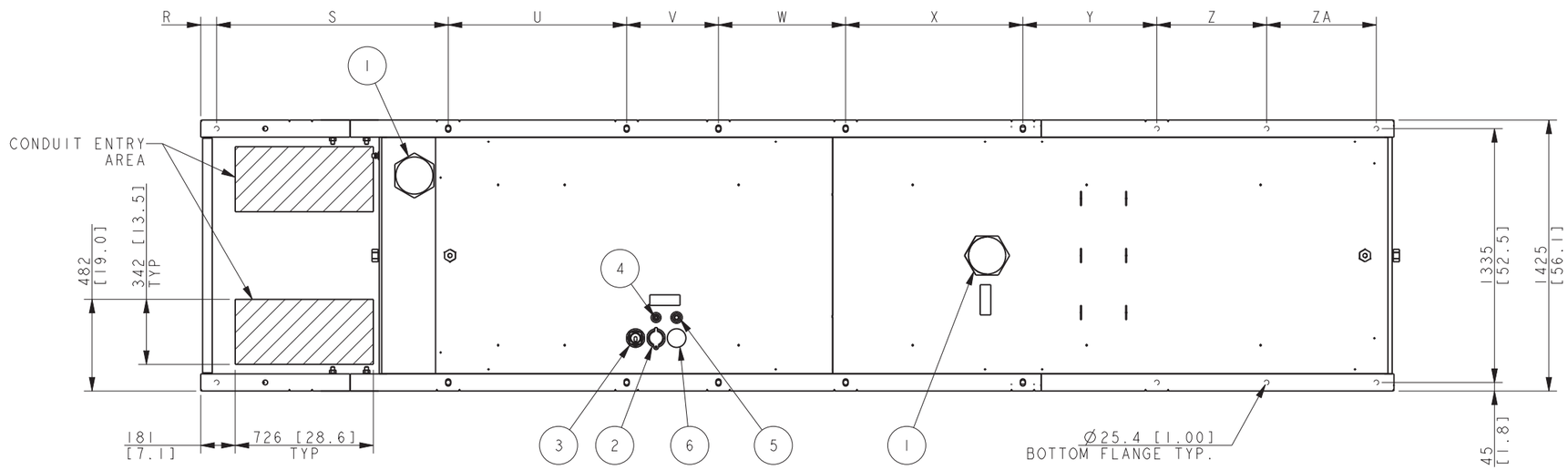

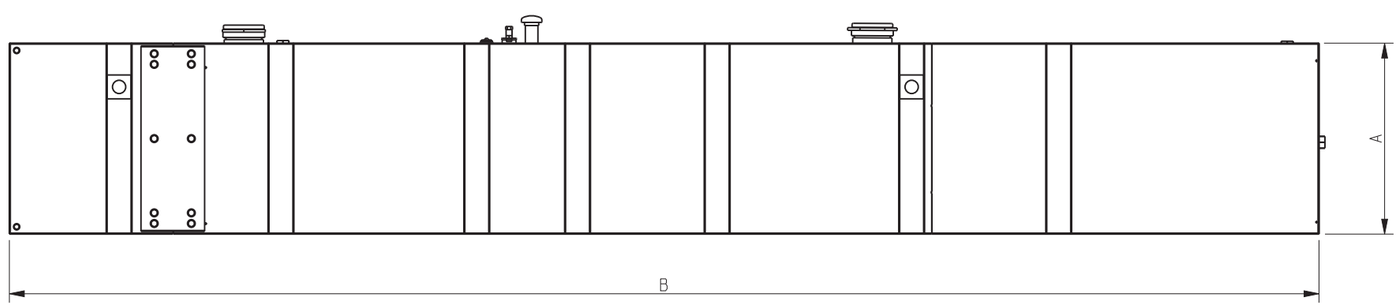

5046 [1333 GAL.] 36 HOUR STANDARD TANK SHOWN.

ITEM	DESCRIPTION
6	VENT, NORMAL
5	RETURN, FUEL (1/2" NPT)
4	SUPPLY, FUEL (1/2" NPT)
3	GAUGE, FUEL LEVEL, W/ SENDER
2	FILL CAP, 2" LOCKABLE W/PIPE RISER
1	CAP, EMERGENCY VENT

REV	DATE	ON COMPOSITE DWGS, SEE PART NO. FOR REVISION LEVEL	BY
C	14DEC2021	STANDARD TANK ADDED; SEE SHEET 1 & 10 [CT216616]	MVT

DO NOT SCALE. REFERENCE THE MODEL FOR ALL UNSPECIFIED DIMENSIONS

THIRD ANGLE PROJECTION

APPROVALS		DATE
DRAWN	MVT	14DEC2021
CHECKED	PKD	14DEC2021
APPROVED	AJD	14DEC2021

KOHLER.
KOHLER, WISCONSIN 53044

THIS DRAWING IN DESIGN AND DETAIL IS KOHLER CO. PROPERTY AND MUST NOT BE USED EXCEPT IN CONNECTION WITH KOHLER CO. WORK. ALL RIGHTS OF DESIGN OR INVENTION ARE RESERVED.

TITLE **DIMENSION PRINT, 350-500REOZJC/D ENCL & TANKS**

SCALE 0.07 | CAD NO. | SHEET 9 of 10

DWG NO. **ADV-9189** | **D**

12 - 36 HOUR
350-500kW STD TANK
OPEN UNIT

TANK INFORMATION

LITERS [GALLONS] MIN HOURS	GENSETS	DIM A MM [INCH]	DIM B MM [INCH]	DIM C MM [INCH]	TANK WEIGHT KG [LBS] (NO FUEL)	D	E	P	Q	R	S	T	U	V
5042 [1332] 48 HOURS	350KW	711.2 [28.0]	5850.1[230.3]	1981.2[78.0]	2751 [6064]	1475.9 [58.1]	5379.3 [211.8]	305.8 [12.0]	595.1 [23.4]	224.5 [48.2]	804.0 [31.7]	616.5 [24.3]	800.1 [31.5]	515.0 [20.3]
5818 [1537] 48 HOURS	400KW	812.8 [32.0]	5850.1[230.3]		2887 [6364]									
6651 [1757] 48 HOURS	500KW	914.4 [36.0]	5850.1[230.3]		3029 [6678]									
7510 [1984] 72 HOURS	350KW	762.0 [30.0]	5850.1[230.3]	2590.8[102.0]	3486 [7686]									
8695 [2297] 72 HOURS	400KW	889.0 [35.0]	5850.1[230.3]		3656 [8061]									
9971 [2634] 72 HOURS	500KW	914.4 [36.0]	6028[237.3]		3901 [8600]									

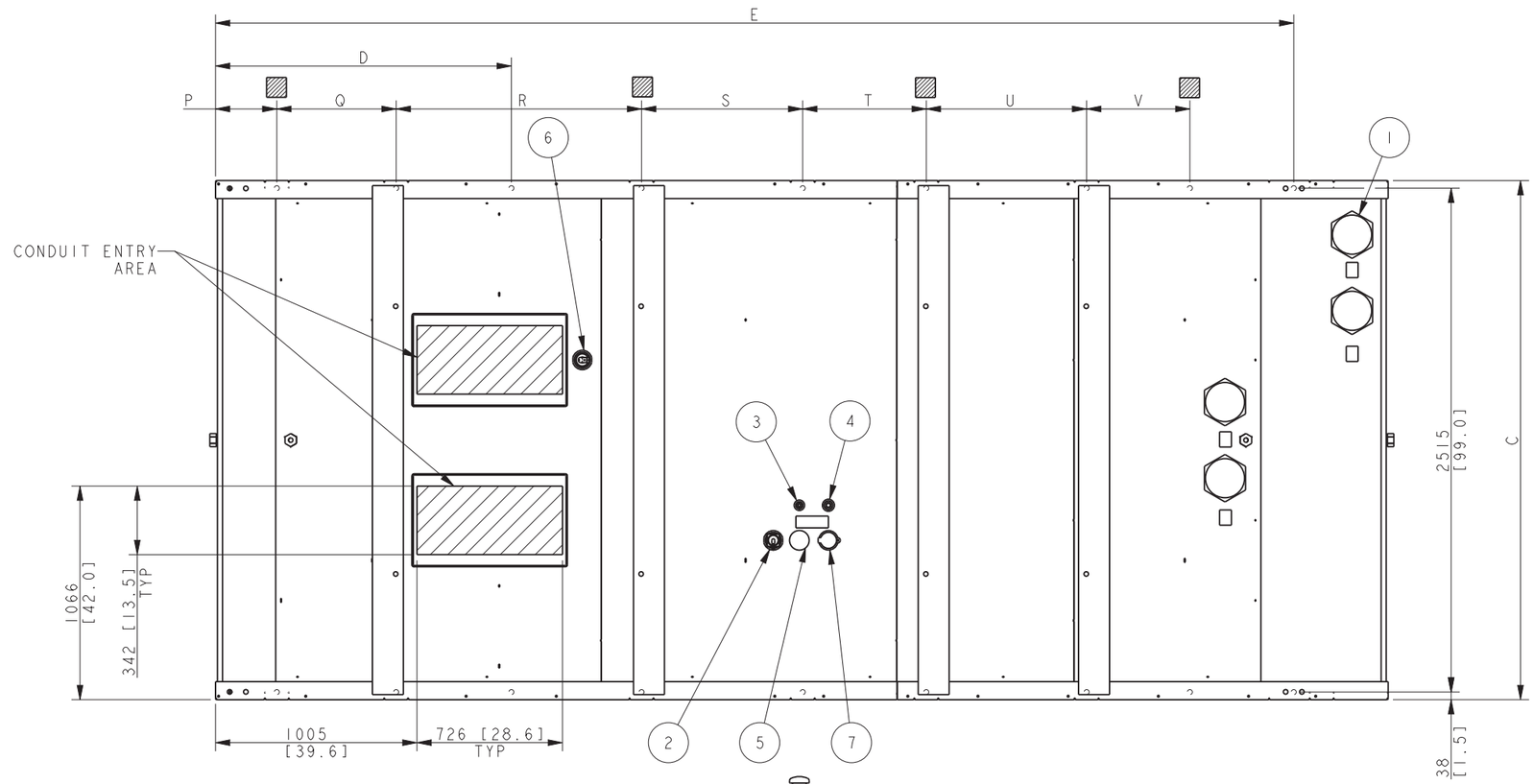

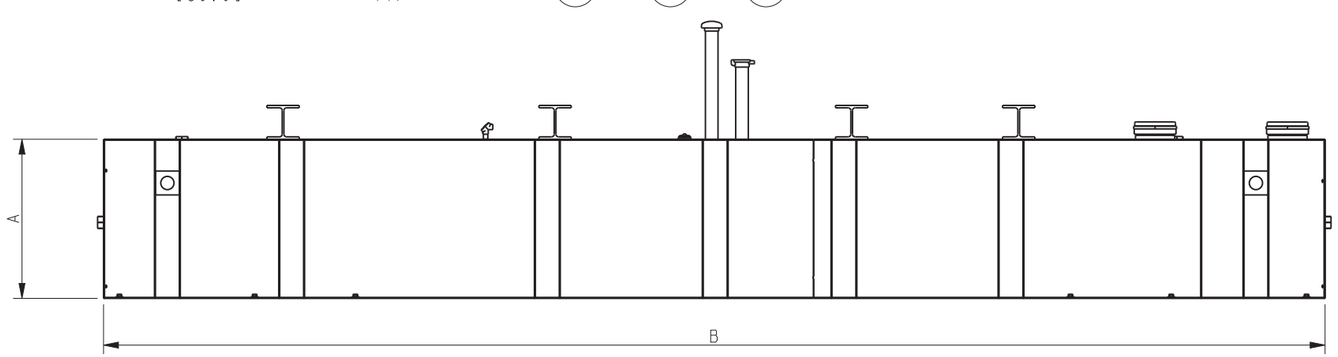

7510 [1984 GAL.] 72 HOUR STANDARD TANK SHOWN.

GROUND CLEARANCE I-BEAM MOUNTING HOLE

ITEM	DESCRIPTION
7	FILL CAP, 2" LOCKABLE W/PIPE RISER
6	SWITCH, FUEL IN BASIN TOP MTD, 2"
5	VENT, NORMAL
4	RETURN, FUEL (1/2" NPT)
3	SUPPLY, FUEL (1/2" NPT)
2	GAUGE, FUEL LEVEL, W/ SENDER
1	CAP, EMERGENCY VENT

REV	DATE	ON COMPOSITE DWGS, SEE PART NO. FOR REVISION LEVEL	BY
C	14DEC2021	STANDARD TANK ADDED; SEE SHEET 1 & 9 [CT216616]	MVT

DO NOT SCALE. REFERENCE THE MODEL FOR ALL UNSPECIFIED DIMENSIONS

THIRD ANGLE PROJECTION

APPROVALS		DATE
DRAWN	MVT	14DEC2021
CHECKED	PKD	14DEC2021
APPROVED	AJD	14DEC2021

KOHLER.
KOHLER, WISCONSIN 53044

THIS DRAWING IN DESIGN AND DETAIL IS KOHLER CO. PROPERTY AND MUST NOT BE USED EXCEPT IN CONNECTION WITH KOHLER CO. WORK. ALL RIGHTS OF DESIGN OR INVENTION ARE RESERVED.

TITLE
DIMENSION PRINT, 350-500REOZJC/D ENCL & TANKS

SCALE 0.07 | CAD NO. | SHEET 10 of 10

DWG NO. **ADV-9189** | **D**

48 - 72 HOUR
350-500kW STANDARD TANK
OPEN UNIT