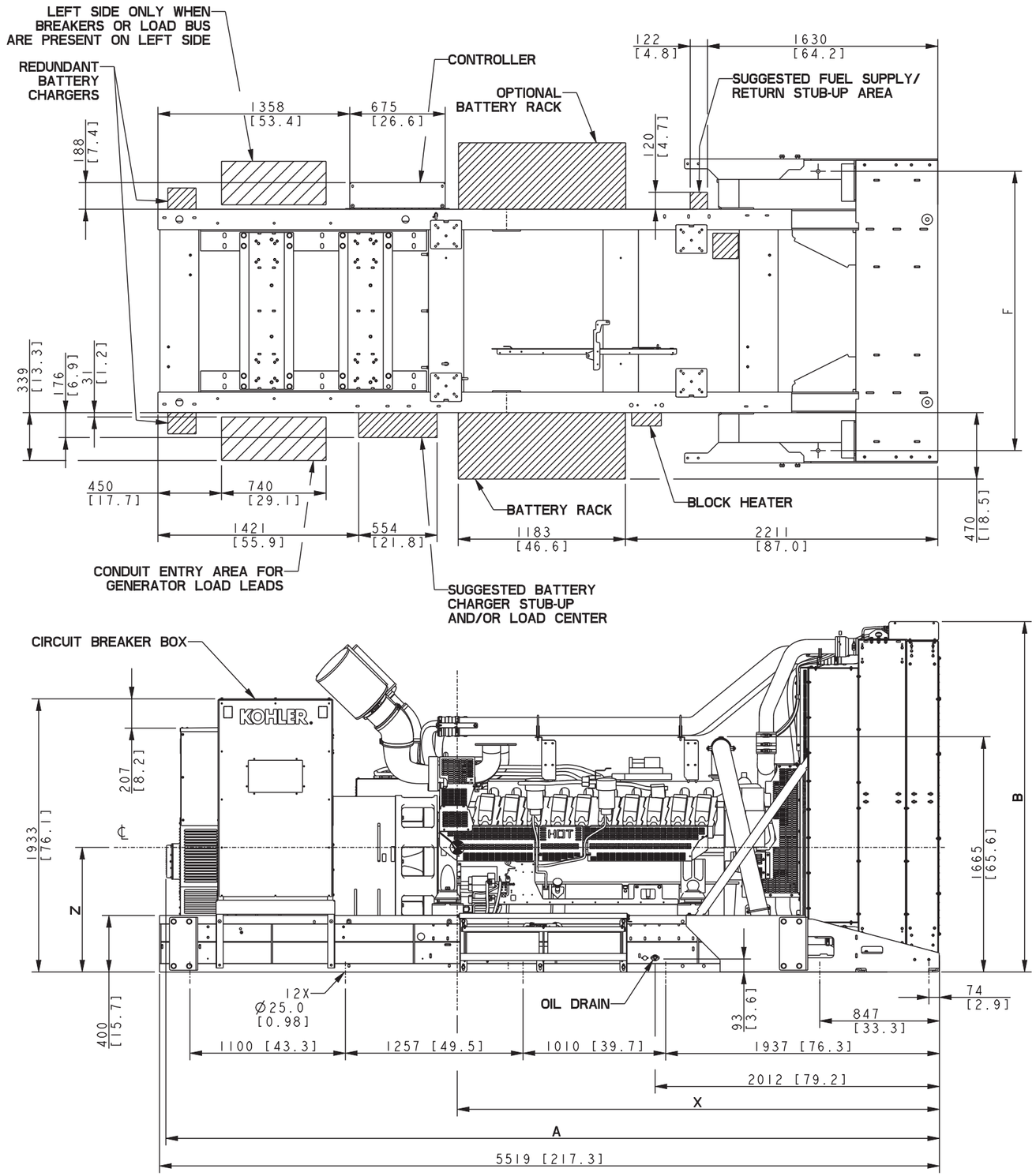

	1250-1750 KW			
	ALTERNATOR FRAME SIZE			
	KH04830TO4D	KH05520TO4D	KH03850TO4D KH04590TO4D KH04920TO4D	KH05740TO4D KH06400TO4D KH06810TO4D
A	5204 [204.9]	5284 [208.0]	5239 [206.3]	5469 [215.3]

1250-1750 KW				
COG WITH RESPECT TO DIFFERENT ALTERNATORS - 9 SECTION RADIATOR				
MODEL	ALT.	GENSET MAXIMUM WEIGHT (WET)	HORIZONTAL CG (WET)	VERTICAL CG (WET)
KD1250	KH04830TO4D	11039 [24346 lbs]	2828 [111.3]	845 [33.3]
KD1250	KH05520TO4D	11352 [25037 lbs]	2879 [113.3]	846 [33.3]
KD1250/1500	KH03850TO4D	11417 [25179 lbs]	2851 [112.2]	846 [33.3]
KD1250/1500	KH04590TO4D	11816 [26061 lbs]	2917 [114.8]	847 [33.3]
KD1500	KH04920TO4D	12016 [26501 lbs]	2944 [115.9]	848 [33.4]
KD1500	KH05740TO4D	12281 [27085 lbs]	2997 [118.0]	848 [33.4]
KD1750	KH06400TO4D	12767 [28157 lbs]	3057 [120.4]	849 [33.4]
KD1250/1500	KH06810TO4D	12896 [28443 lbs]	3077 [121.1]	850 [33.5]
COG WITH RESPECT TO DIFFERENT ALTERNATORS - 10 SECTION RADIATOR				
KD1600	KH04590TO4D	12043 [26561 lbs]	2890 [113.8]	846 [33.3]
KD1600/1750	KH04920TO4D	12243 [27002 lbs]	2917 [114.8]	846 [33.3]
KD1600/1750	KH05740TO4D	12508 [27585 lbs]	2970 [116.9]	847 [33.3]
KD1750	KH06400TO4D	12994 [28657 lbs]	3029 [119.3]	848 [33.4]
KD1600/1750	KH06810TO4D	13123 [28943 lbs]	3049 [120.0]	848 [33.4]

DIMENSIONS	1250/1500 KW 50°C 1600/1750 KW 40°C RADIATOR	1600/1750KW 50°C RADIATOR
B	2480 [97.6]	2580 [101.6]
C	2152 [84.7]	2382 [93.8]
D	2022 [79.6]	2247 [88.5]
E	1894 [74.5]	2000 [78.7]
F	1977 [77.8]	2207 [86.9]

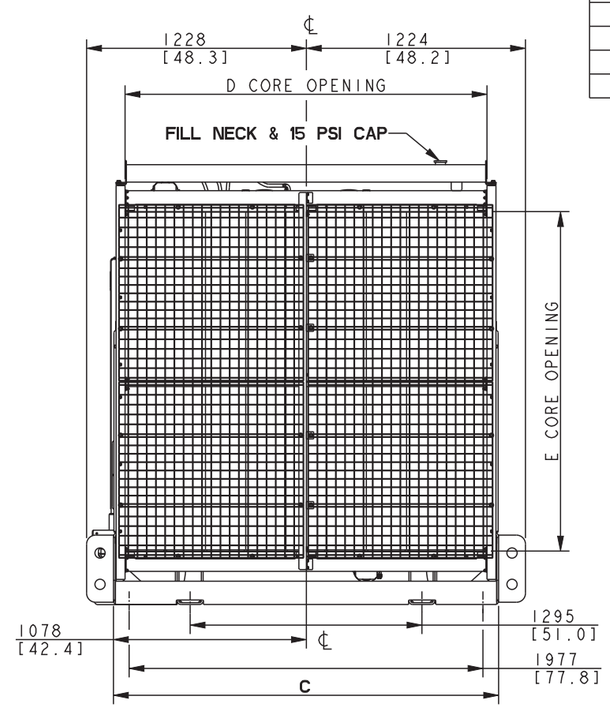

NOTES:

1) DIMENSIONS IN [] ARE ENGLISH EQUIVALENTS.

2) IF AN ENCLOSURE IS USED THE FUEL LINE MUST BE STUBBED UP FROM DIRECTLY UNDER THE UNIT. REFER TO ENCLOSURE ADV.

3) IF IBC OR OSHPD CERTIFICATION IS REQUIRED SEE SEISMIC ADV FOR INSTALLATION INSTRUCTIONS.

4) IF SUBBASE FUEL TANK AND/OR ENCLOSURE IS USED. REFER TO SUBBASE FUEL TANK/ENCLOSURE ADV TO DETERMINE MOUNTING LOCATION.

208-600V
KD1250-1750KW 60HZ

REV	DATE	ON COMPOSITE DWGS, SEE PART NO. FOR REVISION LEVEL	BY
E	8-20-18	SHEET 8 ADDED, SEE SHEET 3 [CT189948]	SSS
F	23APR2020	(C-1,2) "1250/1500 KW 50°C 1600/1750 KW 40°C RADIATOR" WAS "1250/1500 KW 50°C RADIATOR"; SEE SHEET 7 [CT203726]	YBY
G	19MAY2020	(B-8) CIRCUIT BREAKER BOX CALLOUT ADDED; SEE SHEET 4 [CT204162]	PAR
H	20AUG2021	(A, B-8) ALTERNATOR UPDATED; (A-6) "A" DIMENSION UPDATED [CT214160]	RVM

DO NOT SCALE. REFERENCE THE MODEL FOR ALL UNSPECIFIED DIMENSIONS

UNLESS OTHERWISE SPECIFIED:
ALL DIMENSIONS IN MILLIMETERS
GENERAL TOLERANCES:
X.XX ±
X.X ±
X ±
ANGLES ±
SURFACE FINISH ✓ MAX.

THIRD ANGLE PROJECTION

APPROVALS		DATE
DRAWN	ADP	8-19-16
CHECKED	CEK	8-19-16
APPROVED	TAS	8-19-16

KOHLER.
KOHLER, WISCONSIN 53044

TITLE DIMENSION PRINT, KD1250-1750KW

SCALE 0.40 | CAD NO. | SHEET 1 of 8

DWG NO. ADV-8899 | D

KD1250-1750 KW		
ALTERNATOR	LOW VOLTAGE (380-600V)	ALTERNATOR FRAME SIZE
	AA	A
KH0564ITO4D	4427 [174.3]	5699 [224.4]
KH0672ITO4D	4529 [178.3]	5799 [228.3]

1250-1750 KW				
COG WITH RESPECT TO DIFFERENT ALTERNATORS - 9 SECTION RADIATOR				
MODEL	ALT.	GENSET MAXIMUM WEIGHT (WET)	HORIZONTAL CG (WET) "X"	VERTICAL CG (WET) "Z"
KD1250/1500	KH0564ITO4D	12016 [26501 lbs]	3016 [118.7]	846 [33.3]
KD1250/1500	KH0672ITO4D	12425 [27404 lbs]	3084 [121.4]	847 [33.3]
COG WITH RESPECT TO DIFFERENT ALTERNATORS - 10 SECTION RADIATOR				
KD1600/1750	KH0564ITO4D	12349 [27236 lbs]	2988 [114.1]	844 [33.2]
KD1600/1750	KH0672ITO4D	12759 [28139 lbs]	3056 [120.3]	846 [33.3]

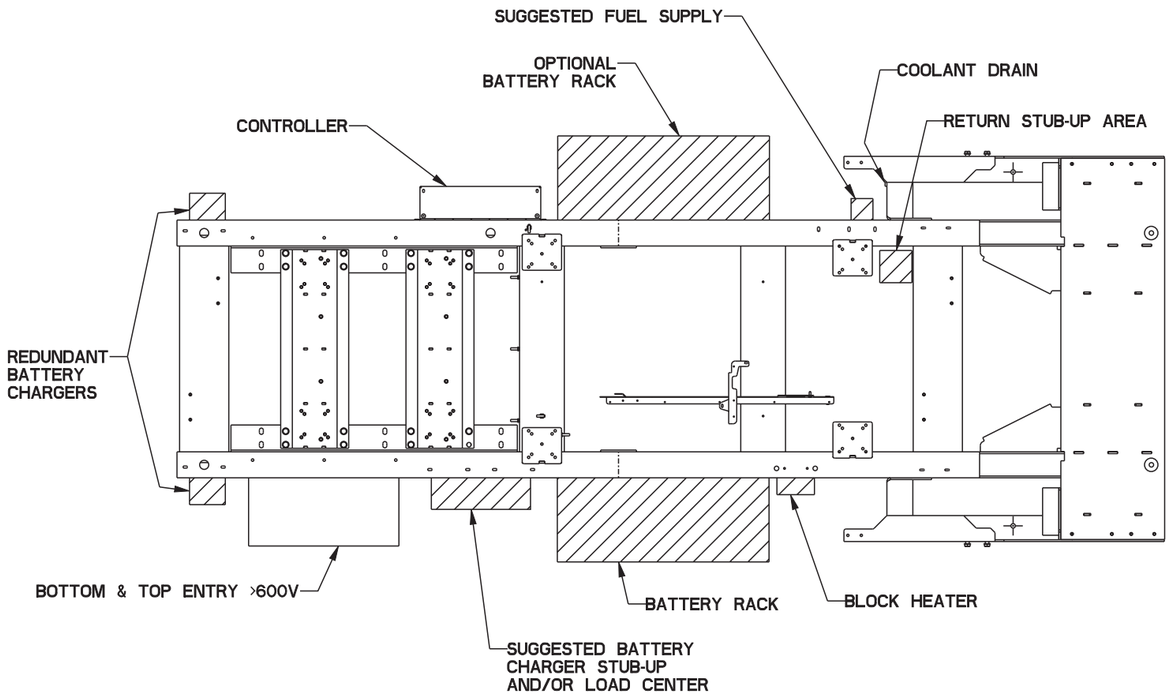

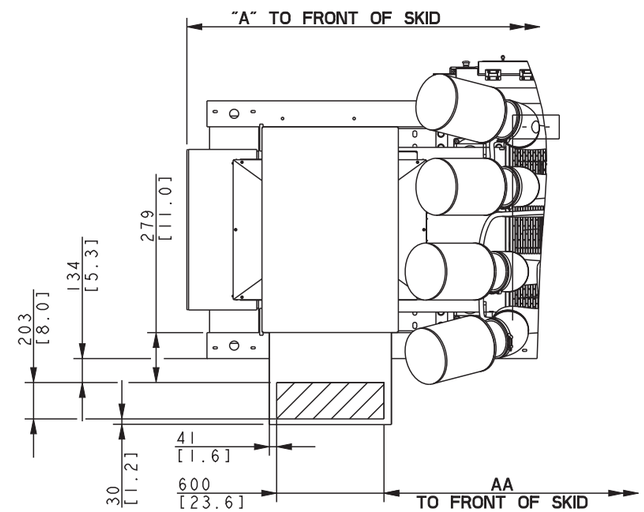

STUB UP AREA
(TOP SIDE OF GENSET)

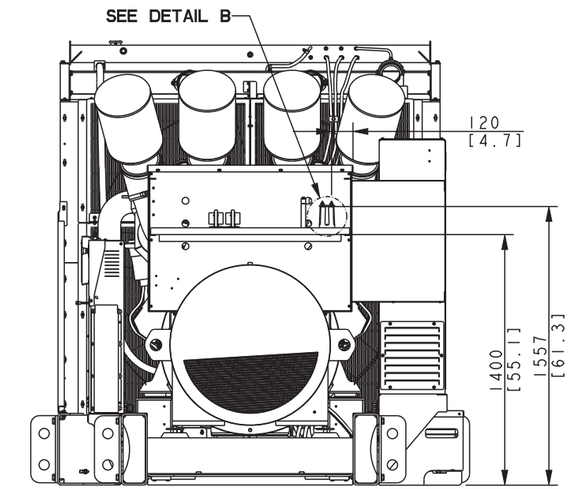

TERMINAL DETAIL
(BACK SIDE OF GENSET)

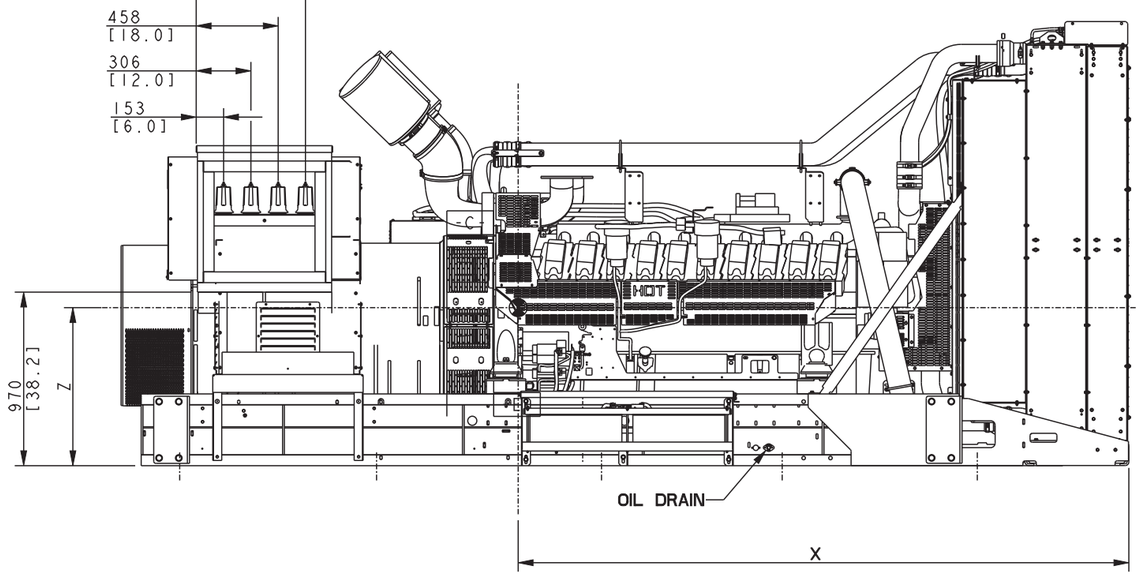

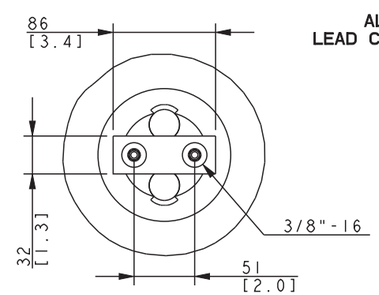

CUSTOMER CONNECTION DETAIL
(TOP SIDE OF GENSET)

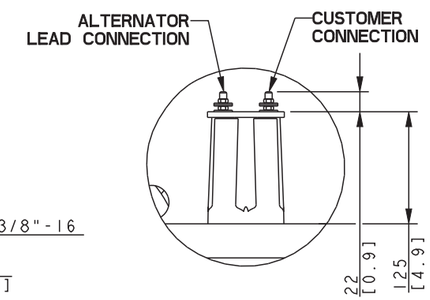

DETAIL B
SCALE 0.30

NOTES:
1) DIMENSIONS IN [] ARE ENGLISH EQUIVALENTS.

2) IF AN ENCLOSURE IS USED THE FUEL LINE MUST BE STUBBED UP FROM DIRECTLY UNDER THE UNIT. REFER TO ENCLOSURE ADV.

3) IF IBC OR OSHPD CERTIFICATION IS REQUIRED SEE SEISMIC ADV FOR INSTALLATION INSTRUCTIONS.

4) IF SUBBASE FUEL TANK AND/OR ENCLOSURE IS USED. REFER TO SUBBASE FUEL TANK/ENCLOSURE ADV TO DETERMINE MOUNTING LOCATION.

>600V
KD1250-1750KW 60HZ

REV	DATE	ON COMPOSITE DWGS, SEE PART NO. FOR REVISION LEVEL	BY
D	12-22-17	VIEWS AND TABLES SHOWING LAYOUT FOR	
		ALTERNATORS KH0564ITO4D & KH0672ITO4D ADDED,	
		SEE SHEET 1, 3 & 5 [CT182881]	YBY
E	8-20-18	SEE SHEET 3 [CT189948]	SSS
F	23APR2020	SEE SHEET 1 & 7 [CT203726]	YBY
G	19MAY2020	SEE SHEET 1 & 4 [CT204162]	PAR
H	20AUG2021	SEE SHEET 1 [CT214160]	RVM

DO NOT SCALE. REFERENCE THE MODEL FOR ALL UNSPECIFIED DIMENSIONS

UNLESS OTHERWISE SPECIFIED:
ALL DIMENSIONS IN MILLIMETERS
GENERAL TOLERANCES:
X.XX ±
X.X ±
X ±
ANGLES ±
SURFACE FINISH MAX.
THIRD ANGLE PROJECTION

APPROVALS		DATE
DRAWN	ADP	8-19-16
CHECKED	CEK	8-19-16
APPROVED	TAS	8-19-16

KOHLER.
KOHLER, WISCONSIN 53044

METRIC | PRO-E

TITLE
DIMENSION PRINT, KD1250-1750KW

SCALE 0.40 | CAD NO. | SHEET 2 of 8

DWG NO. ADV-8899 | D

GENSET MODEL	ALTERNATOR	GENSET MAX WEIGHT (WET)	HORIZONTAL CG (WET) "X" MEASURED FROM FRONT OF GENSET	VERTICAL CG (WET) "Z" MEASURED FROM BOTTOM OF SKID	"A" (FRONT OF SKID TO REAR PANEL OF ALTERNATOR)
KD1500	KH03850TO4D	10310 [22729 lbs]	3110 [122.4]	794 [31.3]	5240 [206.3]
KD1500/KD1600	KH04590TO4D	10709 [23610 lbs]	3173 [124.9]	798 [31.4]	5240 [206.3]
KD1500/KD1600/KD1750	KH04920TO4D	10909 [24051 lbs]	3198 [125.9]	799 [31.5]	5240 [206.3]
KD1500/KD1600/KD1750	KH05740TO4D	11051 [24364 lbs]	3250 [128.0]	801 [31.5]	5469 [215.3]
KD1750	KH06400TO4D	11660 [25706 lbs]	3305 [130.1]	804 [31.7]	5469 [215.3]
KD1500/KD1600/KD1750	KH06810TO4D	11790 [25992 lbs]	3324 [130.9]	805 [31.7]	5469 [215.3]
KD1500/KD1600/KD1750	KH05641TO4D	11015 [24285 lbs]	3274 [128.9]	798 [31.4]	5700 [224.4]
KD1500/KD1600/KD1750	KH06721TO4D	11425 [25188 lbs]	3340 [131.5]	801 [31.5]	5799 [228.3]

DIMENSIONS IN [] ARE INCH EQUIVALENTS

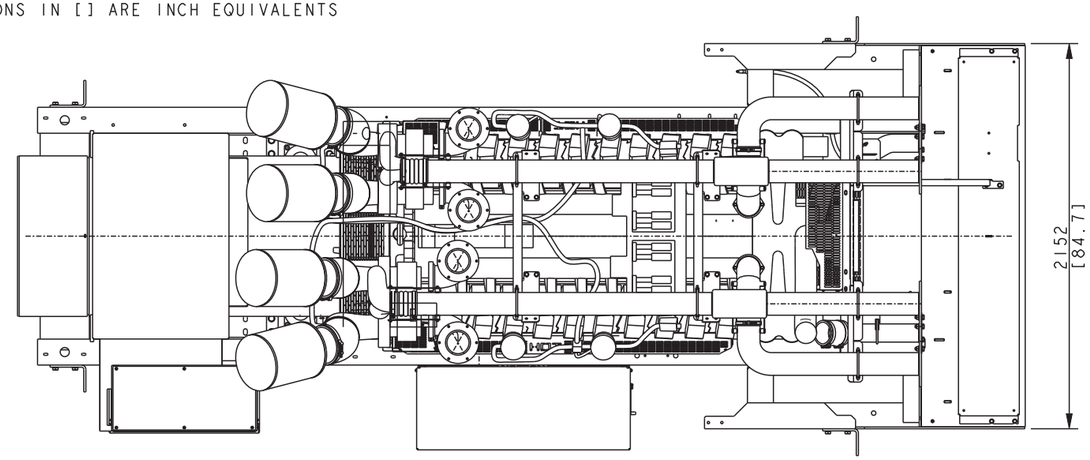

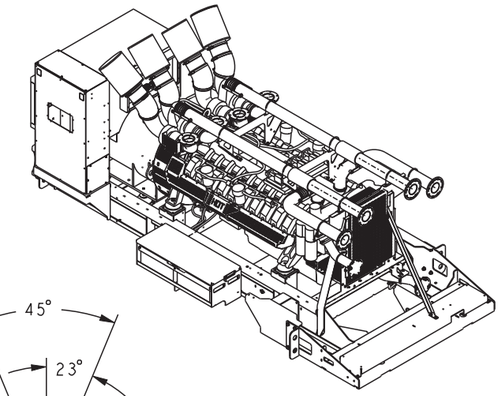

SCALE 0.03

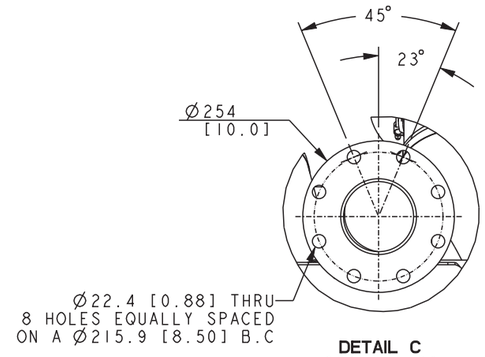

DETAIL C
SCALE 0.20

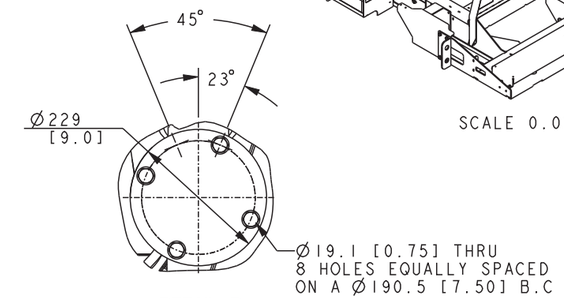

DETAIL D
SCALE 0.20

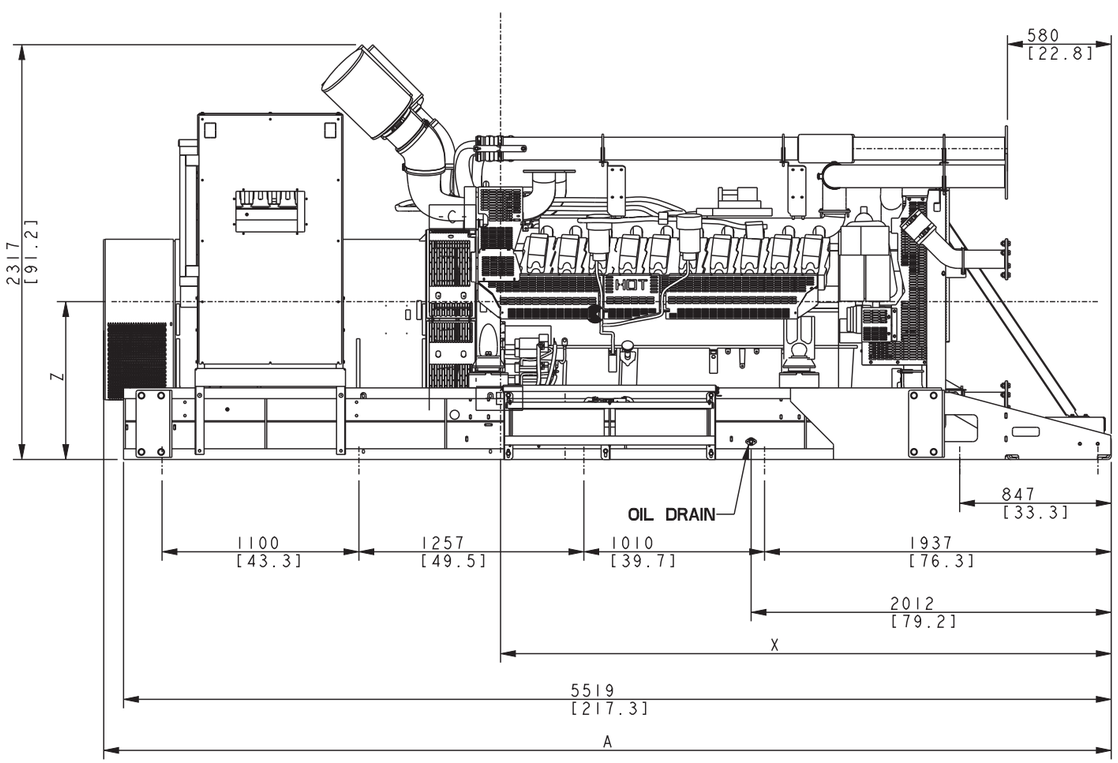

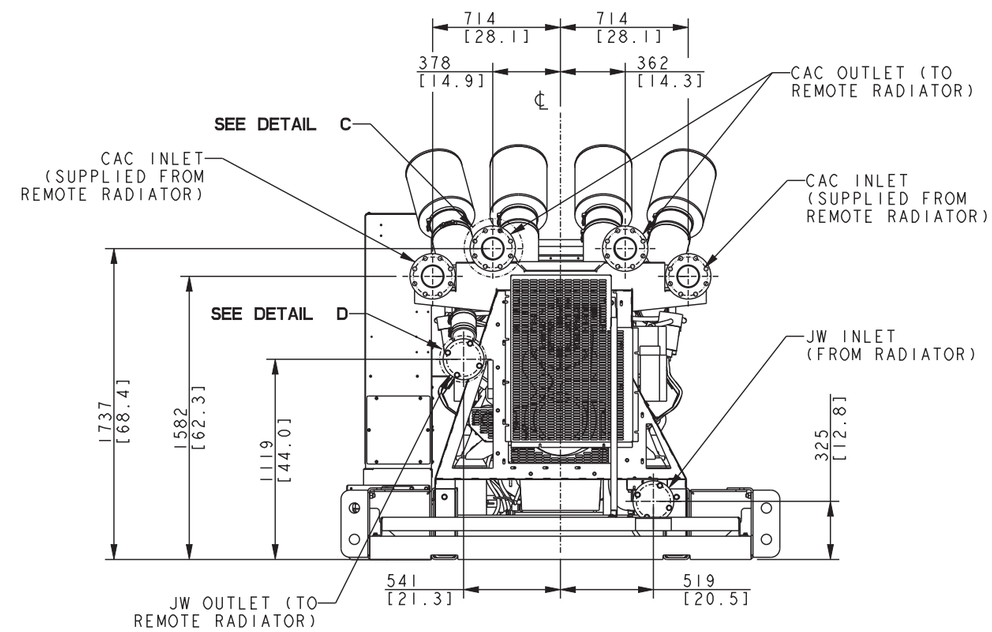

REV	DATE	ON COMPOSITE DWGS, SEE PART NO. FOR REVISION LEVEL	BY
E	8-20-18	REMOTE RADIATOR SETUP ADDED & CONTENTS OF	
		THIS SHEET MOVED TO SHEET 4 [CT189948]	SSS
F	23APR2020	SEE SHEET 1 & 7 [CT203726]	YBY
G	19MAY2020	SEE SHEET 1 & 4 [CT204162]	PAR
H	20AUG2021	SEE SHEET 1 [CT214160]	RVM

DO NOT SCALE. REFERENCE THE MODEL FOR ALL UNSPECIFIED DIMENSIONS

UNLESS OTHERWISE SPECIFIED:
ALL DIMENSIONS IN MILLIMETERS
GENERAL TOLERANCES:
X.XX ± 0.25
X.X ± 1.0
X ± 1.5
ANGLES ± 0°30'
SURFACE FINISH MAX.

THIRD ANGLE PROJECTION

APPROVALS		DATE
DRAWN	ADP	8-17-18
CHECKED	CEK	8-17-18
APPROVED	TAS	8-17-18

KOHLER.
KOHLER, WISCONSIN 53044

TITLE **DIMENSION PRINT, KD1250-1750KW**

SCALE 0.06 | CAD NO. | SHEET 3 of 8

DWG NO. **ADV-8899** | **D**

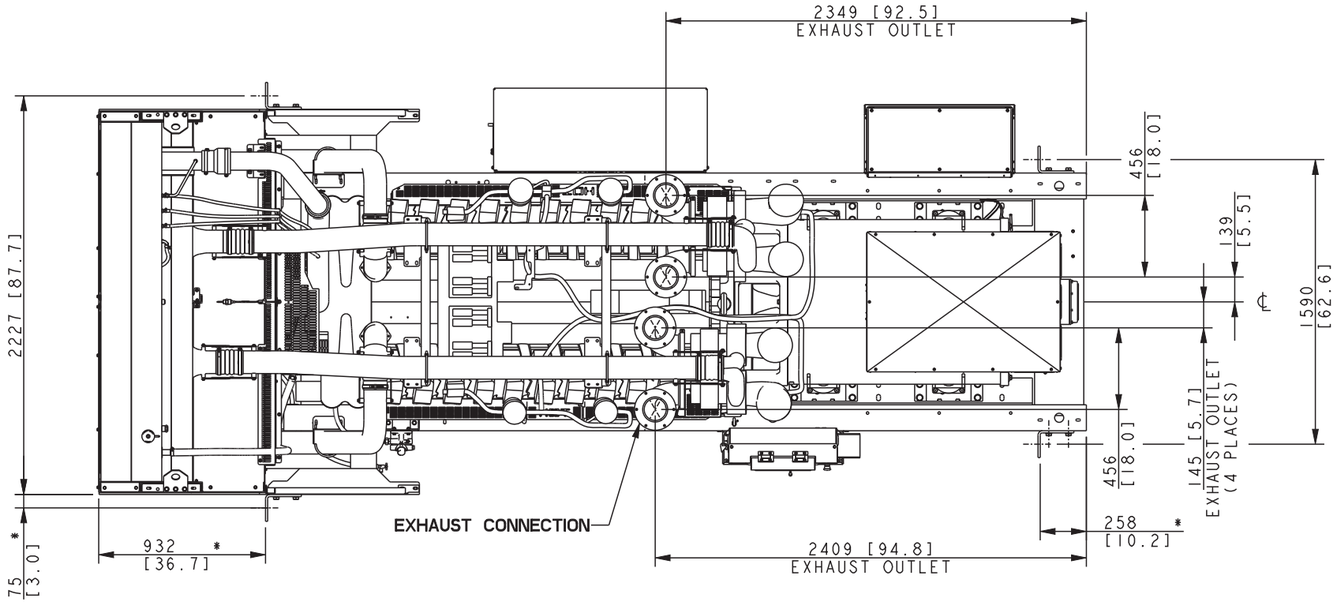

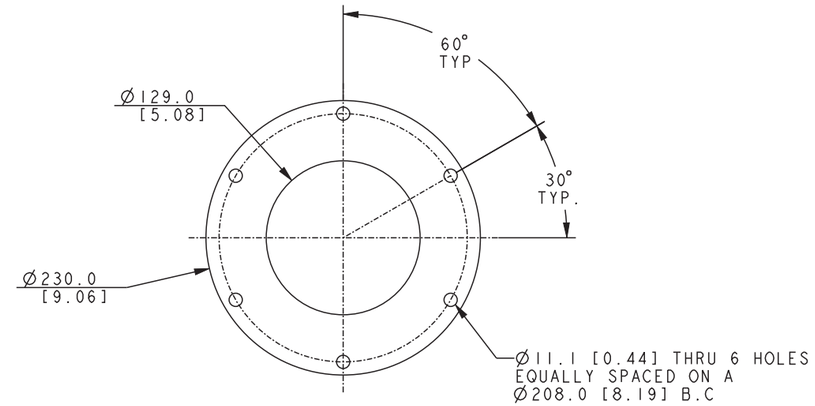

ENGINE EXHAUST OUTLET
(4- PLACES)
DETAIL C

* GENERATOR LIFT POINTS
TO BE USED TO LIFT
OPEN GENERATOR ONLY

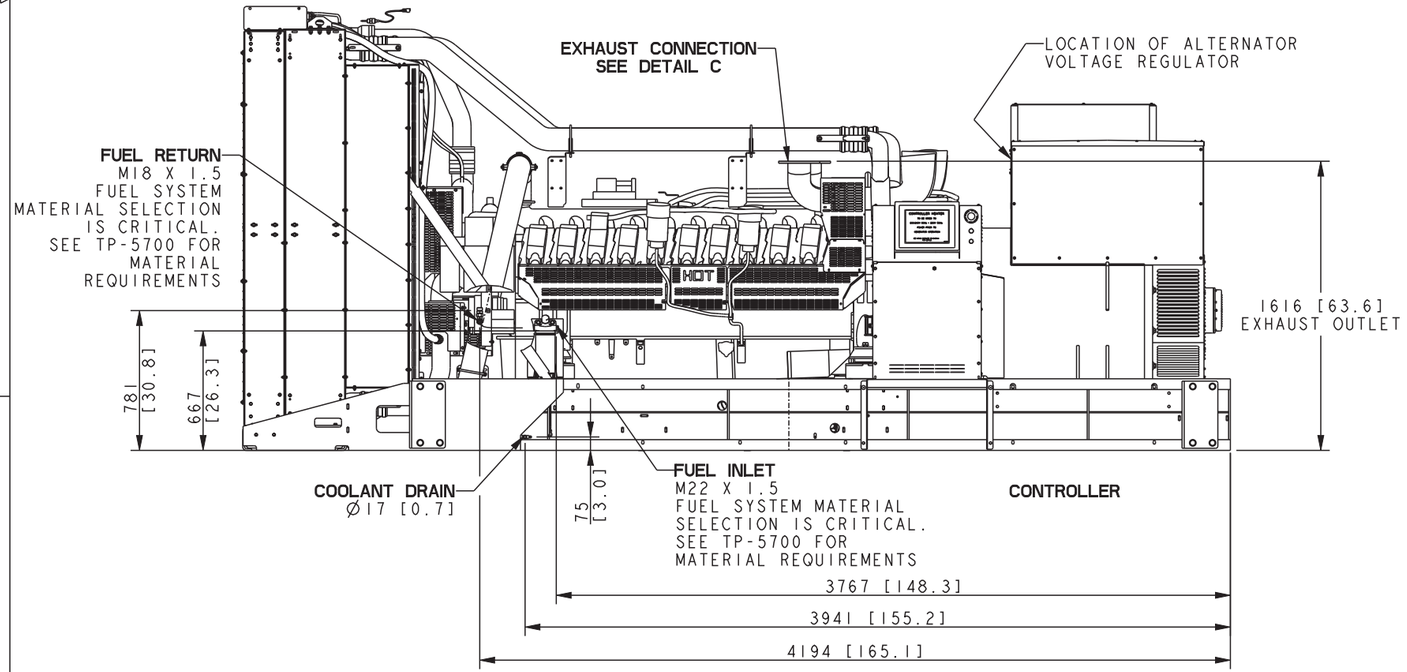

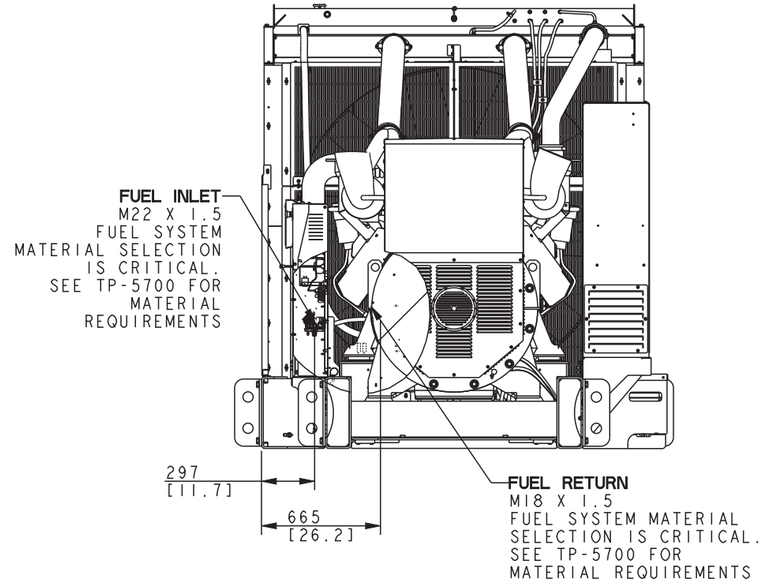

KD1250-1750KW 50/60HZ

REV	DATE	ON COMPOSITE DWGS, SEE PART NO. FOR REVISION LEVEL	BY
C	8-14-17	SEE SHEET 5 [CT174085]	CEK
D	12-22-17	(B-4) 1615.5 [63.60] ADDED & Ø 251 [9.88]	
		REMOVED, (C-8) 2227 [87.68] & (C-4) 1590	
		[62.60] ADDED, SEE SHEET 1 & 5 [CT182881]	YBY
E	8-20-18	CONTENT OF SHEET 3 MOVED TO SHEET 4 & CONTENT	
		OF SHEET 4 MOVED TO SHEET 5 [CT189948]	SSS
F	23APR2020	SEE SHEET 1 & 7 [CT203726]	YBY
G	19MAY2020	(A-5) CONTROLLER CALLOUT ADDED; SEE SHEET 1	
		[CT204162]	PAR
H	20AUG2021	SEE SHEET 1 [CT214160]	RVM

DO NOT SCALE. REFERENCE THE MODEL FOR ALL UNSPECIFIED DIMENSIONS

UNLESS OTHERWISE SPECIFIED:
ALL DIMENSIONS IN MILLIMETERS
GENERAL TOLERANCES:
X.XX ±
X.X ±
X ±
ANGLES ±
SURFACE FINISH
MAX.

THIRD ANGLE PROJECTION

APPROVALS		DATE
DRAWN	ADP	8-19-16
CHECKED	CEK	8-19-16
APPROVED	TAS	8-19-16

KOHLER.
KOHLER, WISCONSIN 53044

TITLE
DIMENSION PRINT, KD1250-1750KW

SCALE 0.40 | CAD NO. | SHEET 4 of 8

DWG NO. ADV-8899 | D

	1250-1750 KW					
	ALTERNATOR FRAME SIZE					
	KH04830TO4D	KH05520TO4D	KH03850TO4D KH04590TO4D KH04920TO4D	KH05740TO4D KH06400TO4D KH06810TO4D	KH05641TO4D	KH06721TO4D
A	5094 [200.6]	5174 [203.7]	5129 [201.9]	5359 [211.0]	5589 [220.0]	5689 [224.0]

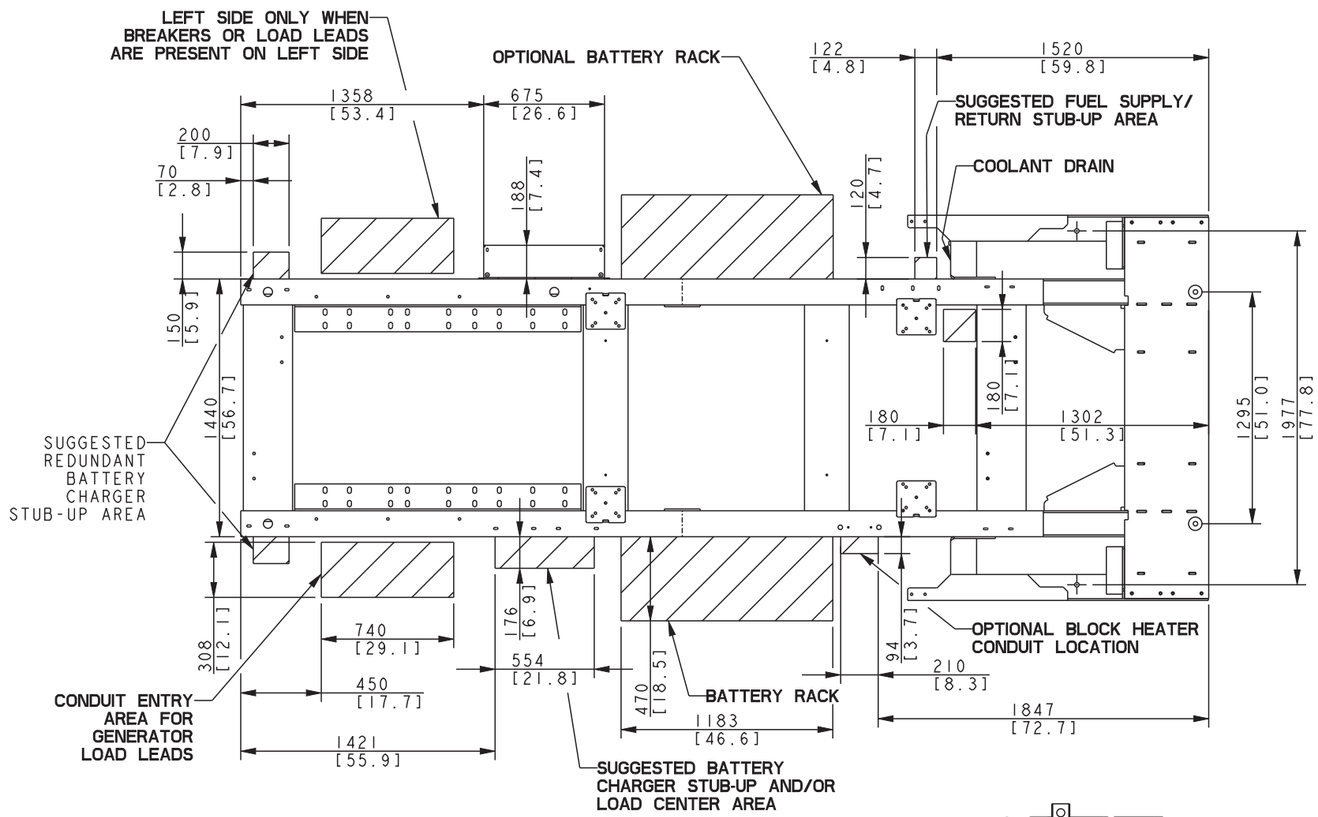

INSTALLATION NOTE

IF IBC CERTIFICATION IS REQUIRED SEE SEISMIC ADV FOR INSTALLATION INSTRUCTIONS

INSTALLATION NOTE

IF SUBBASE FUEL TANK AND/OR SOUND HOUSING IS USED, REFER TO SUBBASE FUEL TANK ADV TO DETERMINE MOUNTING LOCATIONS.

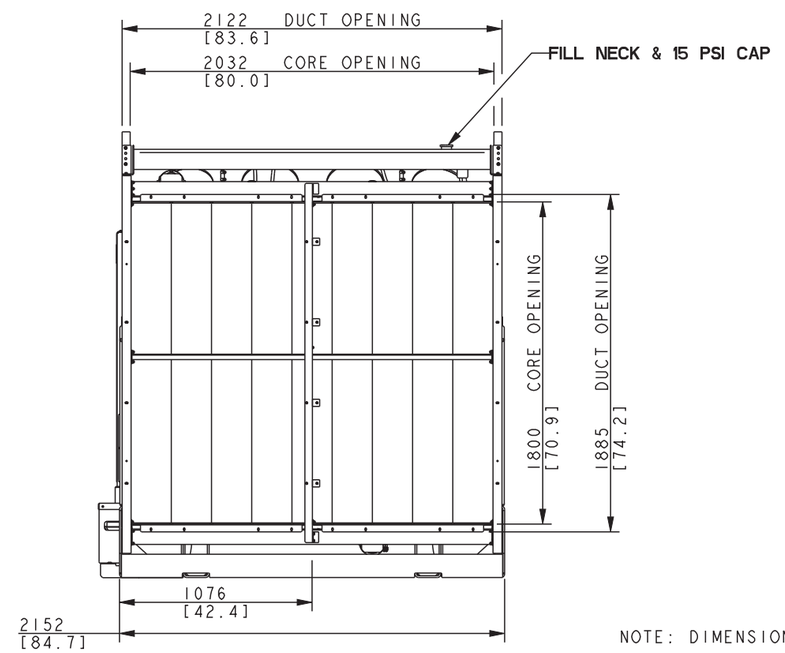

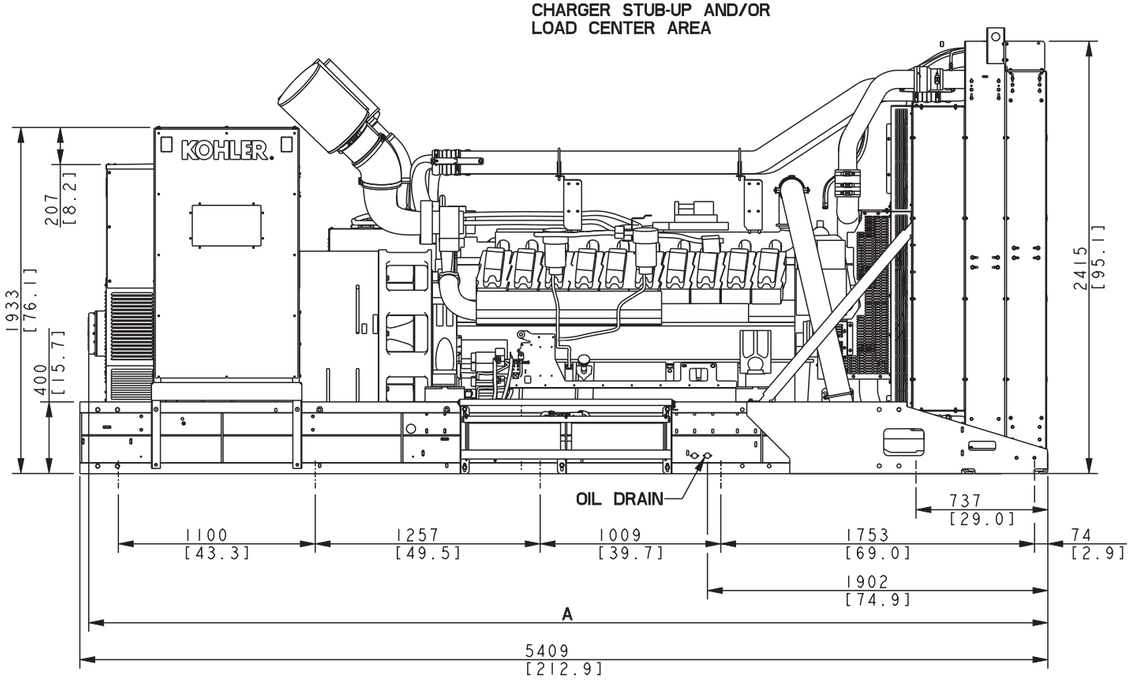

WHEN SUBBASE TANK IS USED CONDUIT LOCATION SHOULD BE ALTERED ACORDINGLY, OR IN STUB-UP AREA FOR SUBBASE TANK. REFER TO SUBBASE ADV.

NOTE: DIMENSIONS IN [] ARE INCH EQUIVALENTS.

KD1250-1750KW 50HZ

REV	DATE	ON COMPOSITE DWGS, SEE PART NO. FOR REVISION LEVEL	BY
-	8-19-16	NEW DRAWING [CT153994]	ADP
A	11-21-16	SEE SHEET 1 & 6 [166235]	CEK
B	5-3-17	(C-4) 1295 WAS 1315 [CT174085]	CEK
C	8-14-17	SEE SHEET 5 [CT174085]	CEK
D	12-22-17	SEE SHEET 1,3 & 5 [CT182881]	YBY
E	8-20-18	CONTENT OF SHEET 4 MOVED TO SHEET 5 & CONTENT OF SHEET 5 MOVED TO SHEET 6 [CT189948]	SSS
F	23APR2020	SEE SHEET 1 & 7 [CT203726]	YBY
G	19MAY2020	SEE SHEET 1 & 4 [CT204162]	PAR
H	20AUG2021	SEE SHEET 1 [CT214160]	RVM

DO NOT SCALE. REFERENCE THE MODEL FOR ALL UNSPECIFIED DIMENSIONS

UNLESS OTHERWISE SPECIFIED: ALL DIMENSIONS IN MILLIMETERS
GENERAL TOLERANCES:
X.XX ±
X.X ±
X ±
ANGLES ±
SURFACE FINISH MAX.
THIRD ANGLE PROJECTION

APPROVALS		DATE
DRAWN	ADP	8-19-16
CHECKED	CEK	8-19-16
APPROVED	TAS	8-19-16

KOHLER.
KOHLER, WISCONSIN 53044

TITLE DIMENSION PRINT, KD1250-1750KW

SCALE 0.40 | CAD NO. | SHEET 5 of 8

DWG NO. ADV-8899 | D

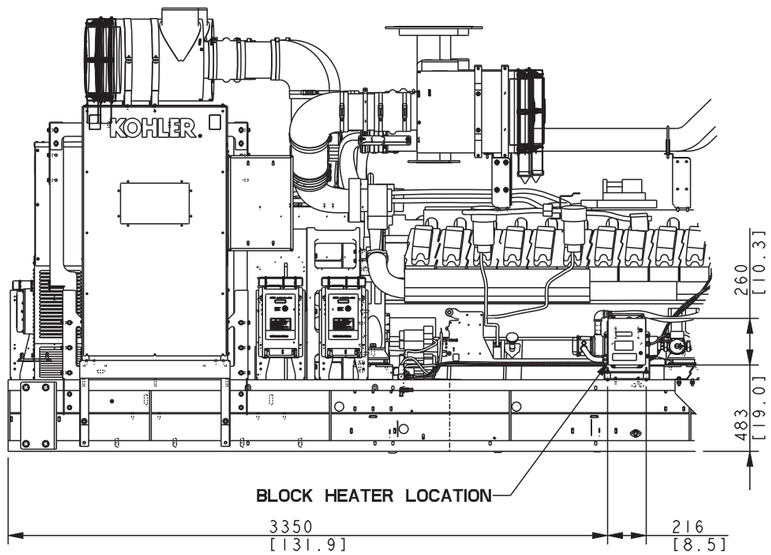

BLOCK HEATER
(RIGHT SIDE OF GENSET)

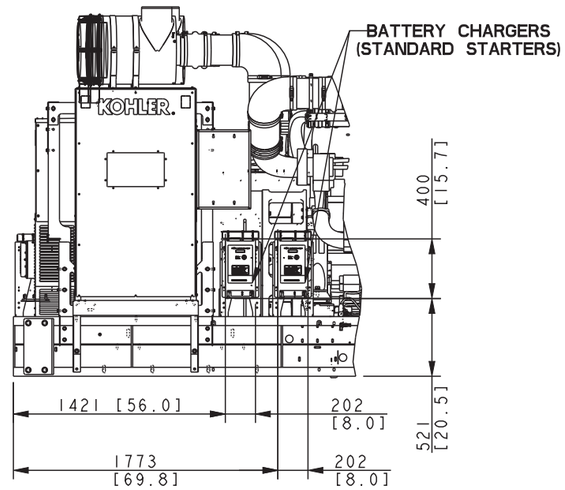

BATTERY CHARGER
(RIGHT SIDE OF GENSET)

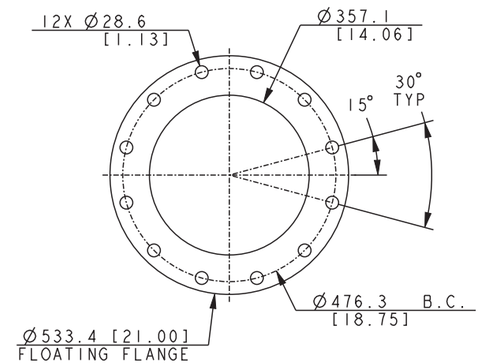

DETAIL E
COLLECTOR EXHAUST OUTLET
SCALE 0.15

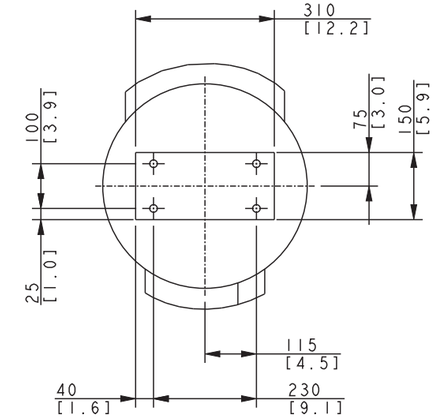

DETAIL D
SCALE 0.15

* DIMENSIONS MAY CHANGE AS ELBOWS CAN BE ROTATED

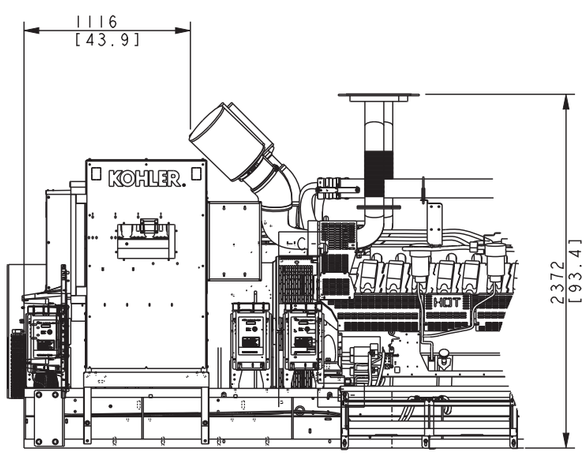

STANDARD DUTY AIR CLEANER
(RIGHT SIDE OF GENSET)

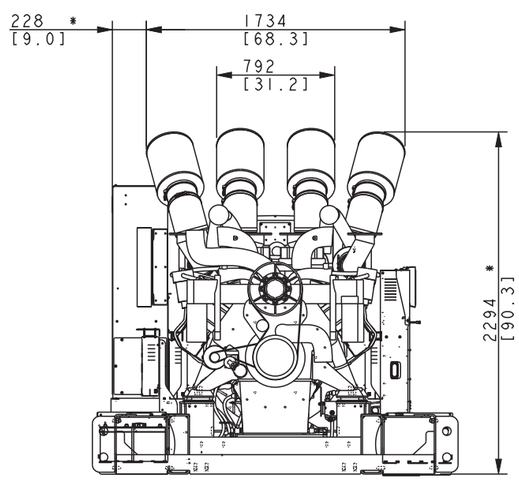

FRONT VIEW WITHOUT RADIATOR

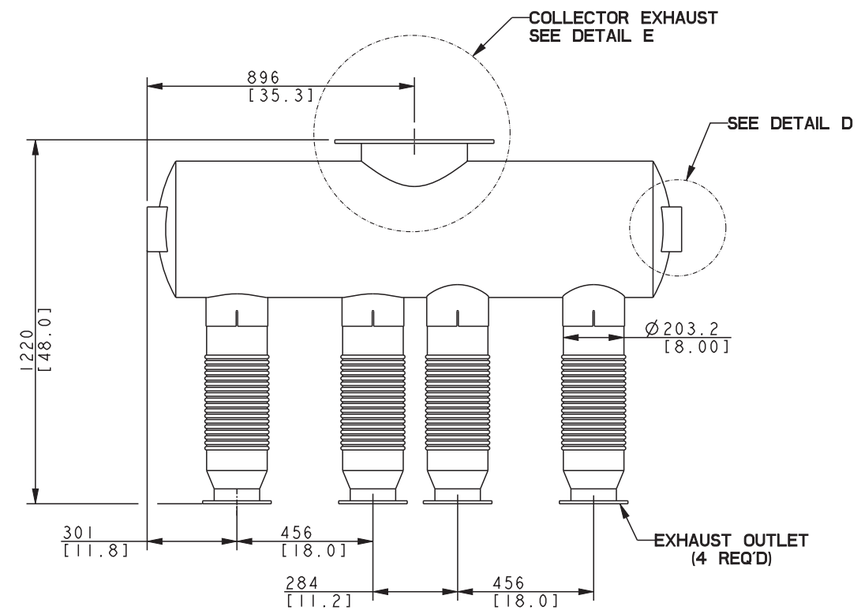

COLLECTOR EXHAUST

NOTE:
FLEXIBLE EXHAUST TO BE FULLY SUPPORTED BY EXTERNAL STRUCTURE
(ALLOWED BENDING MOMENT AT EXHAUST FLANGE INTERFACE LESS THAN 19 Nm)

REV	DATE	ON COMPOSITE DWGS, SEE PART NO. FOR REVISION LEVEL	BY
B	5-3-17	SEE SHEETS 1, 4 & 6 [CT174085]	CEK
C	8-14-17	(D-3) DETAIL D REDESIGNED [CT174085]	CEK
D	12-22-17	(B-5) & (A-5) NOTE ADDED, (B-6) 227.8 [8.97]	
		ADDED, SEE SHEET 1 & 3 [CT182881]	YBY
E	8-20-18	CONTENT OF SHEET 5 MOVED TO THIS SHEET &	
		CONTENT OF THIS SHEET MOVED TO SHEET 7	
		[CT189948]	SSS
F	23APR2020	SEE SHEET 1 & 7 [CT203726]	YBY
G	19MAY2020	SEE SHEET 1 & 4 [CT204162]	PAR
H	20AUG2021	SEE SHEET 1 [CT214160]	RVM

DO NOT SCALE. REFERENCE THE MODEL FOR ALL UNSPECIFIED DIMENSIONS

UNLESS OTHERWISE SPECIFIED:
ALL DIMENSIONS IN MILLIMETERS
GENERAL TOLERANCES:
X.XX ±
X.X ±
X ±
ANGLES ±
SURFACE FINISH
MAX.

THIRD ANGLE PROJECTION

APPROVALS		DATE
DRAWN	ADP	9-20-16
CHECKED	CEK	9-20-16
APPROVED	TAS	9-20-16

KOHLER.
KOHLER, WISCONSIN 53044

TITLE
DIMENSION PRINT,
KD1250-1750KW

SCALE 0.40 | CAD NO. | SHEET 6 of 8
DWG NO. ADV-8899 | D

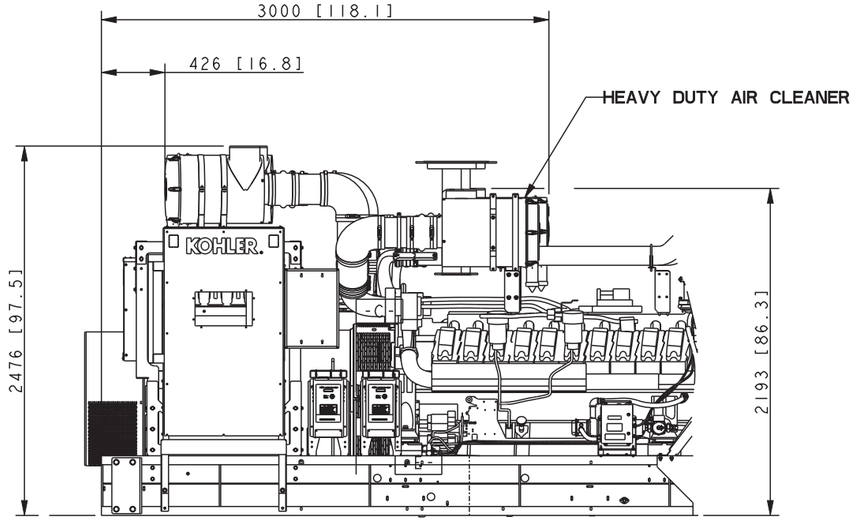

HEAVY DUTY AIR CLEANER
(RIGHT SIDE OF GENSET)

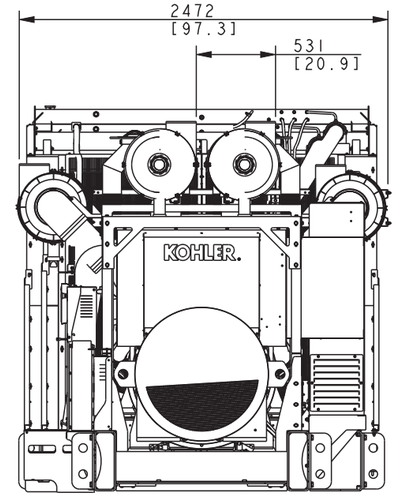

RADIATOR DUCT FLANGE DIMENSIONS			
MODEL	E	F	G
50 Hz	2120 [83.5]	1840 [72.5]	250 [9.8]
1250/1500 kW 60 Hz 50°C 1600/1750 kW 60 Hz 40°C	2120 [83.5]	1990 [78.3]	250 [9.8]
1600/1750 kW 60 Hz 50°C	2347 [92.4]	2090 [82.3]	250 [9.8]

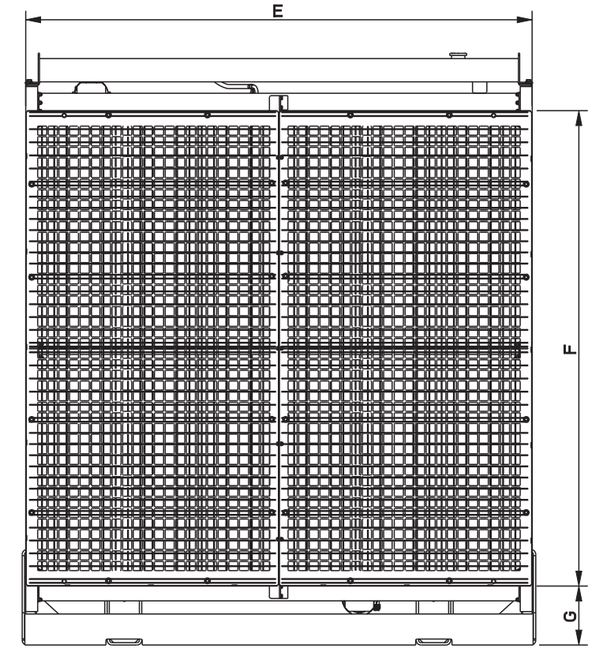

DUCT FLANGE & STONE GUARD

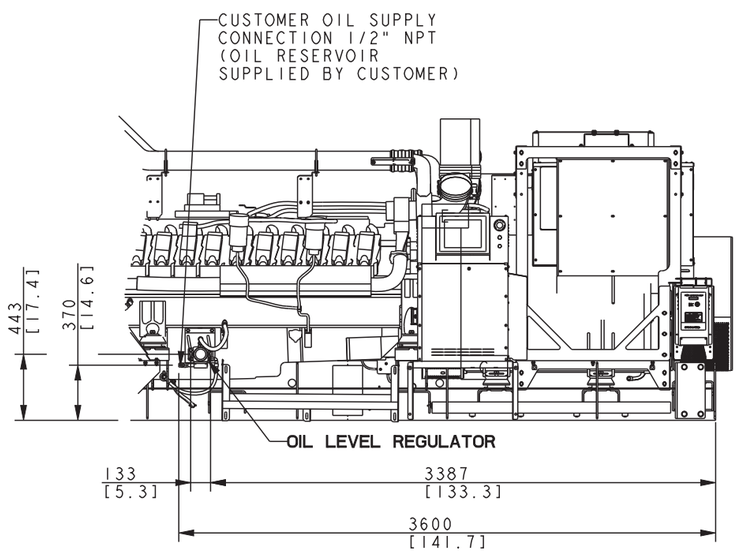

AUTOMATIC OIL REPLENISHMENT SYSTEM
(LEFT SIDE OF GENSET)

NOTE:
LEFT SIDE SKID MEMBER HIDDEN TO SHOW CONNECTION FROM OIL LEVE REGULATOR TO OIL SUMP.

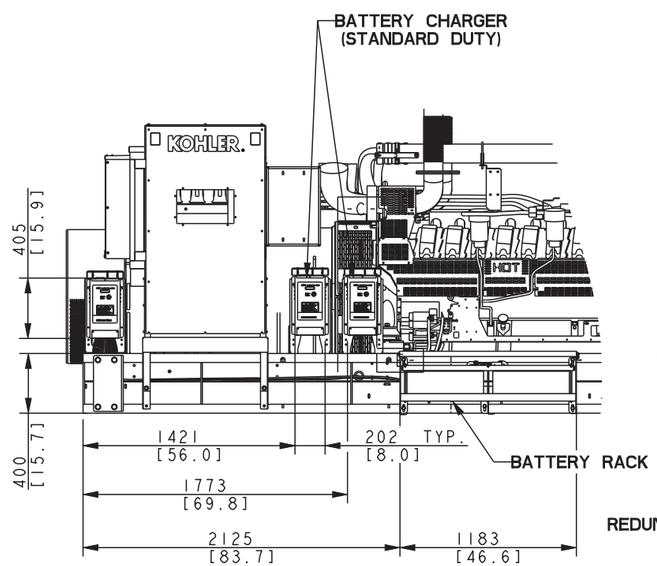

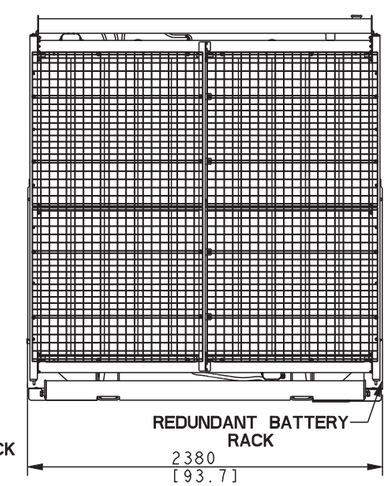

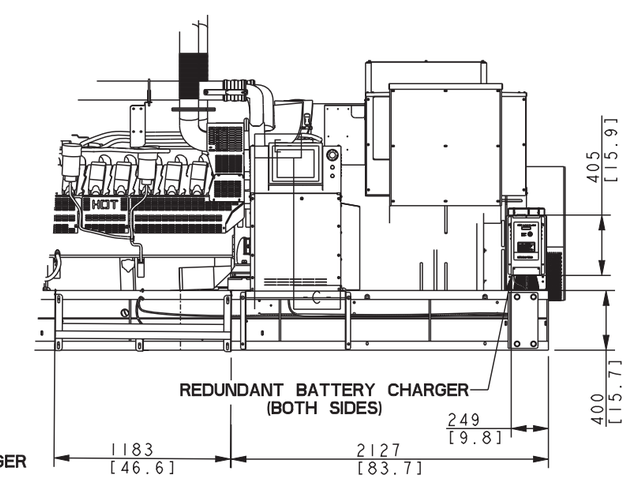

REDUNDANT STARTER, BATTERY RACK & CHARGER
(FRONT VIEW WITHOUT RADIATOR)

REV	DATE	ON COMPOSITE DWGS, SEE PART NO. FOR REVISION LEVEL	BY
C	8-14-17	SEE SHEET 5 [CT174085]	CEK
D	12-22-17	SEE SHEET 1,3 & 5 [CT182881]	YBY
E	8-20-18	CONTENT OF SHEET 6 MOVED TO SHEET 7 & CONTENT	
		OF SHEET 7 MOVED TO SHEET 8 [CT189948]	SSS
F	23APR2020	(D-2,3) "1250/1500 kW 60 Hz 50°C 1600/1750	
		kW 60 Hz 40°C" WAS "1250/1500 kW 60 Hz" &	
		"1600/1750 kW 60 Hz 50°C" WAS "1600/1750 kW	
		60 Hz"; SEE SHEET 1 [CT203726]	YBY
G	19MAY2020	SEE SHEET 1 & 4 [CT204162]	PAR
H	20AUG2021	SEE SHEET 1 [CT214160]	RVM

KD1250-1750KW 50/60HZ

DO NOT SCALE. REFERENCE THE MODEL FOR ALL UNSPECIFIED DIMENSIONS

UNLESS OTHERWISE SPECIFIED:
ALL DIMENSIONS IN MILLIMETERS
GENERAL TOLERANCES:
X.XX ±
X.X ±
X ±
ANGLES ±

SURFACE FINISH
MAX.

THIRD ANGLE PROJECTION

APPROVALS		DATE
DRAWN	ADP	8-19-16
CHECKED	CEK	8-19-16
APPROVED	TAS	8-19-16

KOHLER.
KOHLER, WISCONSIN 53044

TITLE
DIMENSION PRINT,
KD1250-1750KW

SCALE 0.40 | CAD NO. | SHEET 7 of 8
DWG NO. ADV-8899 | D

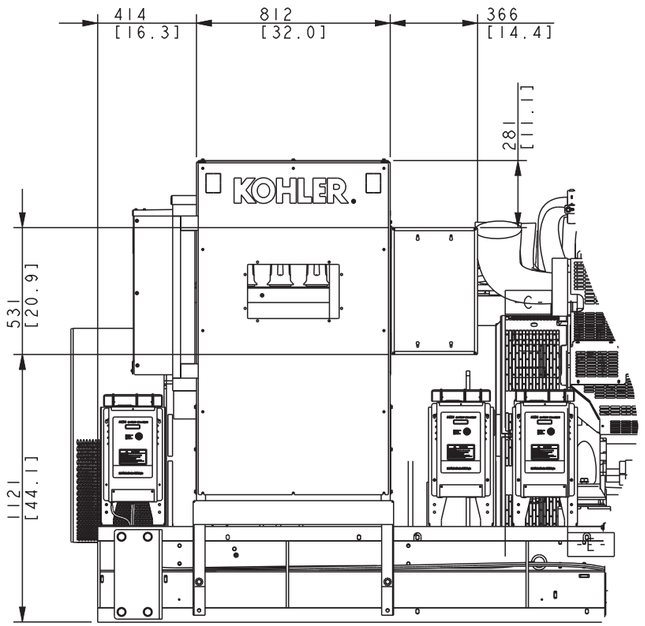

BASIC ELECTRICAL PACKAGE (BEP) LOAD CENTER

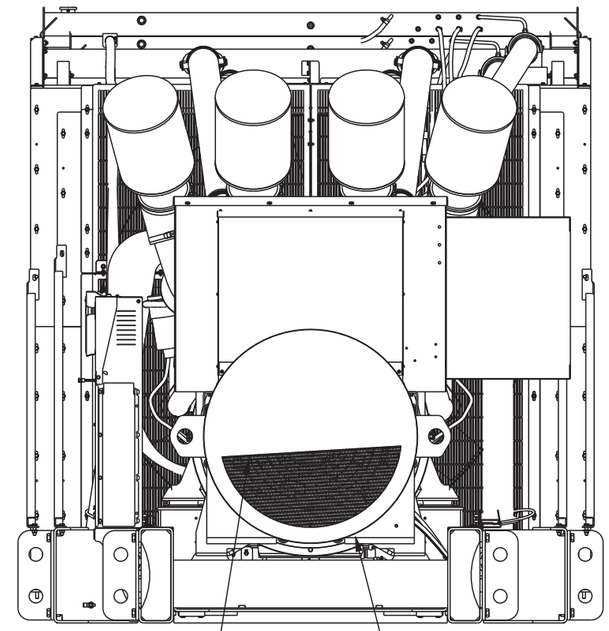

ALTERNATOR AIR FILTER INSTALLED INSIDE OF LOUVERED PANELS (7% DERATE ON GENERATOR RATING)

ALTERNATOR HEATER THREADS INTO REAR CASTING OF ALTERNATOR

ALTERNATOR AIR FILTER & HEATER

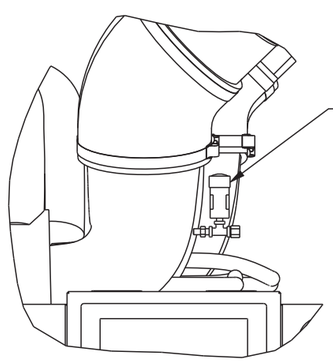

AIR RESTRICTION GUAGE

AIR FILTER RESTRICTION INDICATOR
(LEFT SIDE OF GENSET)

KD1250-1750KW 50/60HZ

REV	DATE	ON COMPOSITE DWGS, SEE PART NO. FOR REVISION LEVEL	BY
-	8-19-16	NEW DRAWING [CT153994]	ADP
A	11-21-16	SEE SHEET 1 & 6 [166235]	CEK
B	5-3-17	(A-6) REGENERATE VIEW [CT174085]	CEK
C	8-14-17	SEE SHEET 5 [CT174085]	CEK
D	12-22-17	SEE SHEET 1,3 & 5 [CT182881]	YBY
E	8-20-18	CONTENT OF SHEET 7 MOVED TO SHEET 8 [CT189948]	SSS
F	23APR2020	SEE SHEET 1 & 7 [CT203726]	YBY
G	19MAY2020	SEE SHEET 1 & 4 [CT204162]	PAR
H	20AUG2021	SEE SHEET 1 [CT214160]	RVM

DO NOT SCALE. REFERENCE THE MODEL FOR ALL UNSPECIFIED DIMENSIONS

UNLESS OTHERWISE SPECIFIED:
ALL DIMENSIONS IN MILLIMETERS
GENERAL TOLERANCES:
X.XX ±
X.X ±
X ±
ANGLES ±
SURFACE FINISH
MAX.

THIRD ANGLE PROJECTION

APPROVALS		DATE
DRAWN	ADP	8-19-16
CHECKED	CEK	8-19-16
APPROVED	TAS	8-19-16

KOHLER.
KOHLER, WISCONSIN 53044

TITLE
DIMENSION PRINT, KD1250-1750KW

SCALE 0.40 | CAD NO. | SHEET 8 of 8

DWG NO. **ADV-8899** | **D**