16-3/4" oval drop-in/undermount bathroom sink, no overflow
S1201-0

Features
- No faucet holes; requires wall- or counter-mount faucet
- Center drain, no overflow

Material
- Premium 20-gauge stainless steel with mirror finish

Installation
- Drop-in or undermount

Recommended Products/Accessories
K-23726 Drain treatment
K-23729 Stainless steel cleaner

Included Components
1069536 Mounting hardware for undermount installation

Codes/Standards
None Applicable

STERLING® Stainless Steel Bathroom Sinks Five-Year Limited Warranty
See website for detailed warranty information.

STERLING
A KOHLER COMPANY

16-3/4" oval drop-in/undermount bathroom sink, no overflow
S1201-0

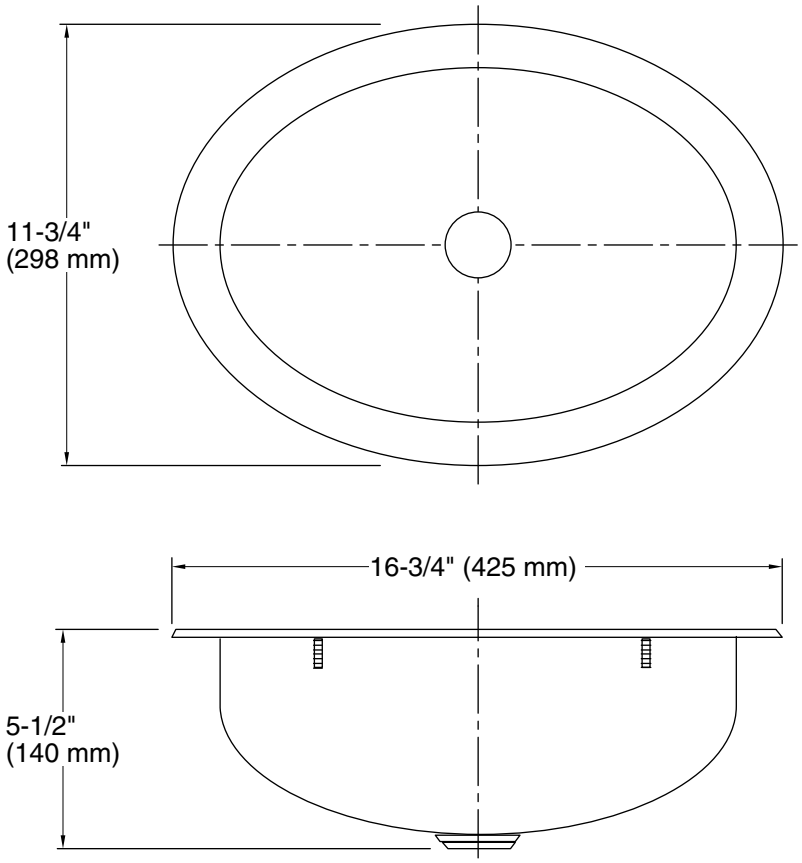

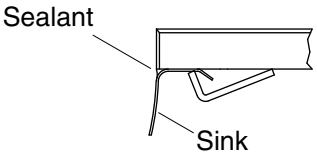

Under-mount Installation

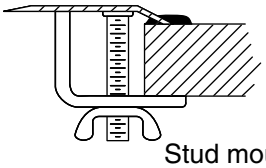

Stud mounting provides easy installation

Drop-in Installation

Technical Information

All product dimensions are nominal.

Bowl configuration:	Single
Bowl area (Only):	Length: 14-11/16" (373 mm) Width: 9-11/16" (246 mm) Water depth: 4-1/2" (114 mm)
With overflow:	No
Drain hole:	1-1/2" (38 mm)
Template:	1033124-7, required, included

Notes

Install this product according to the installation instructions.

Measure your actual product for roughing-in details.