McAllister®

23-1/2" undermount single-bowl kitchen sink

97447

Features

- No faucet holes; requires wall- or counter-mount faucet
- 8" (203 mm) depth
- 3-3/4" (94 mm) drain opening
- Stainless steel with luster finish

Material

- Premium 18-gauge stainless steel

Installation

- Undermount

Recommended Products/Accessories

K-23726 Drain treatment
K-23729 Stainless steel cleaner

Codes/Standards

ASME A112.19.3/CSA B45.4
All applicable US Federal and State material regulations
IAPMO Certification

STERLING® Stainless Steel Sinks Lifetime Limited Warranty

See website for detailed warranty information.

McAllister®

23-1/2" undermount single-bowl kitchen sink

97447

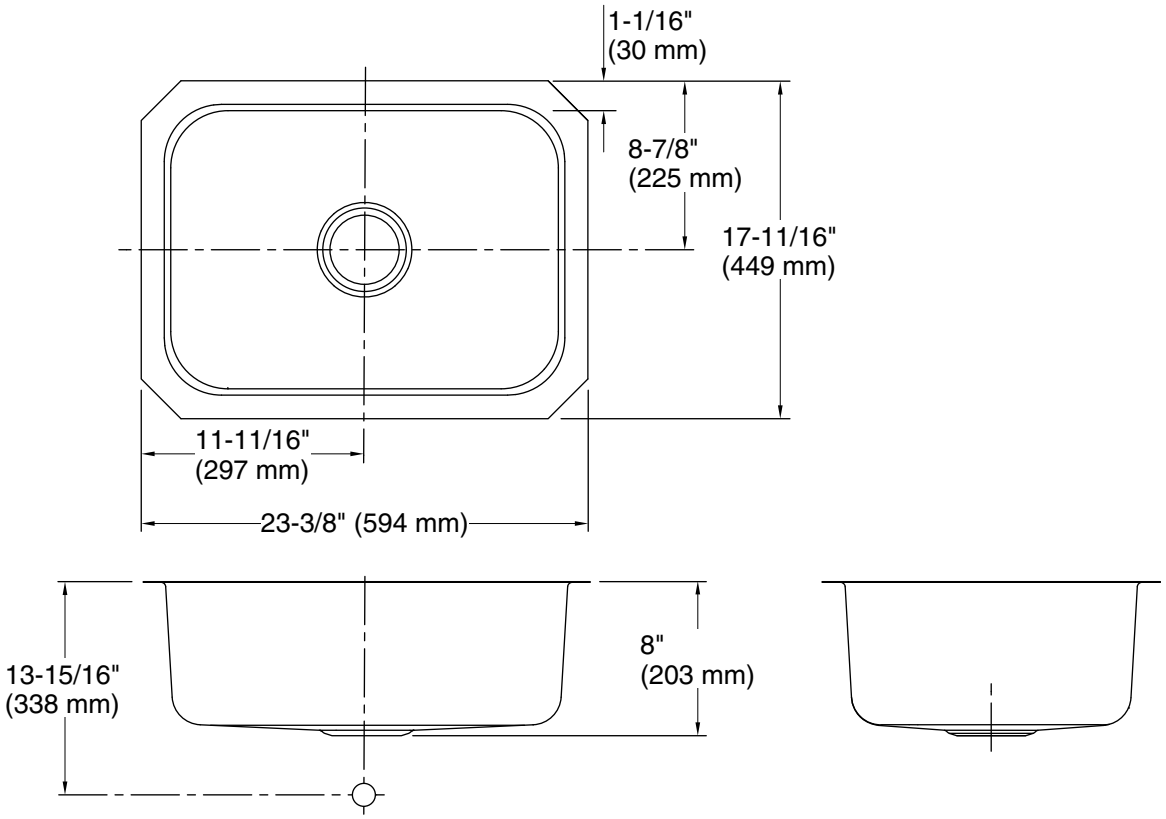

Technical Information

All product dimensions are nominal.

Bowl configuration:	Single
Bowl area:	Length: 21" (533 mm) Width: 15-1/4" (387 mm) Bowl depth: 7-3/4" (197 mm) Water depth: 7-3/4" (197 mm)
Drain hole:	3-5/8" (92 mm)
Template:	1315840-7, required, included

Notes

Install this product according to the installation instructions.