STERLING
A KOHLER COMPANY

24" straight grab bar
80001024

Features
- Adjustable mounting brackets to fit specific installation requirements
- Elliptical shape makes the bar easier to grip
- Available in finishes to coordinate with nickel and silver shower door finishes

Material
- Anodized aluminum construction with a durable rustproof and chip-resistant finish

Installation
- Installs from front side of wall

Recommended Products/Accessories
K-23723 Faucet cleaner

Codes/Standards
ASTM F446

STERLING® Grab Bars Ten-Year Limited Warranty
See website for detailed warranty information.

Available Colors/Finishes
Color tiles intended for reference only.

Color	Code	Description
	N	Nickel
	V	Matte Silver

STERLING
A KOHLER COMPANY

24" straight grab bar
80001024

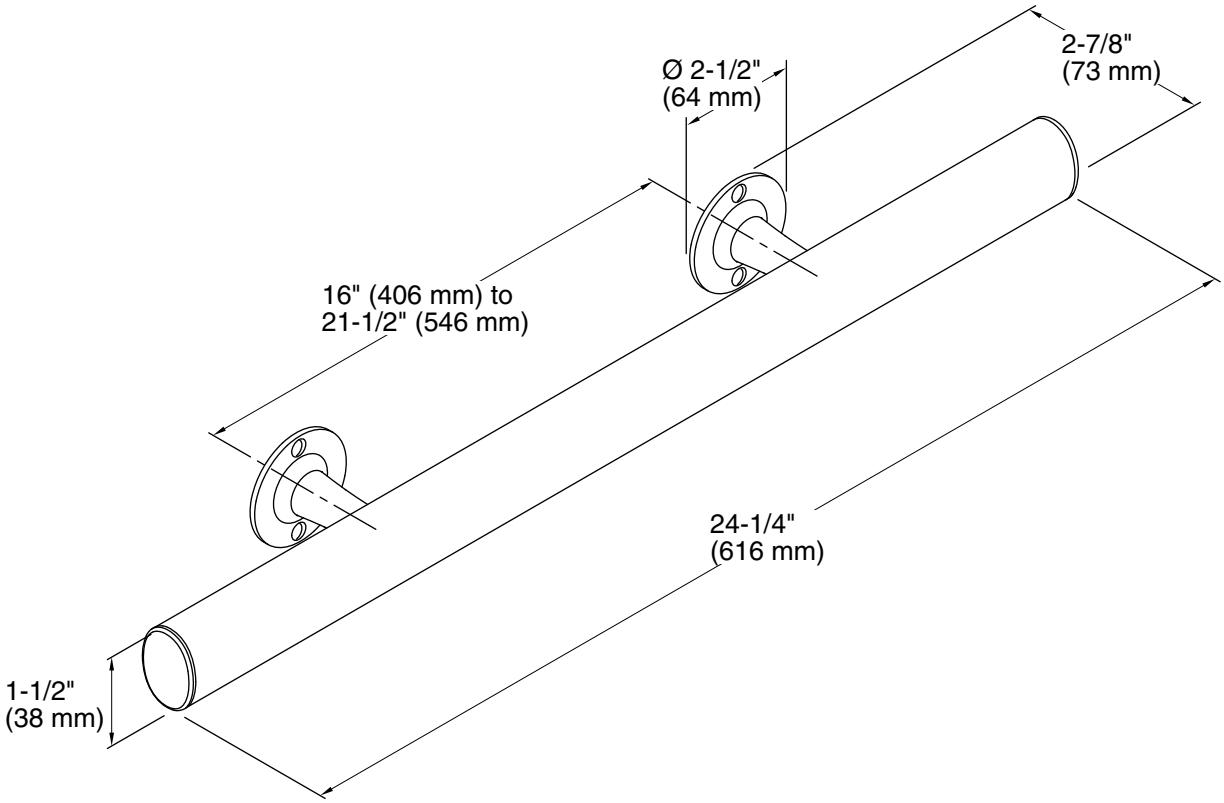

Technical Information
All product dimensions are nominal.

Material: Anodized Aluminum

Notes
Install this product according to the installation guide.

WARNING: Risk of personal injury. Unless properly installed, the grab bar may not adequately support the weight of the user.

Custom Walls – Fasten grab bar directly to studs when possible. If not possible, install a 1” x 6” blocking board to studs prior to installing wallboard and finished wall material.

Sterling Age-in-Place Surrounds – Obtain backer board locations from the specification sheet for your model to select the appropriate grab bar size.