STERLING
A KOHLER COMPANY

Accord®

36" Shower stall with center drain

72240100

VIKRELL
MATERIAL STRENGTH. PROVEN PERFORMANCE.™

Features

- 3-1/2" threshold.
- Durable high-gloss finish.
- Center drain.
- Pivot snap-together modular design.
- Geometric back-wall design.
- Convenient shelves provide generous storage space.

Material

- Made from solid Vikrell® material for strength, durability, and lasting beauty.

Installation

- Alcove.
- Caulk-free installation.

Recommended Products/Accessories

K-23726 Drain treatment
K-23733 Vikrell® cleaner

Included Components

Product consists of:

72245100 36" x 72-1/4" shower end wall set
72241100 36" x 36" shower base
72242100 36" x 72-1/4" shower back wall

Codes/Standards

CSA B45.5/IAPMO Z124
ASTM E162
ASTM E662
HUD, UM Bulletin 73

Warranty – Bathing Fixtures (and) Kitchen and Utility Sinks Made of Solid Vikrell® Material

See website for detailed warranty information.

Available Colors/Finishes

Color tiles intended for reference only.

Color	Code	Description
	0	White
	96	KOHLER Biscuit

STERLING
A KOHLER COMPANY

Accord®

36" Shower stall with center drain

72240100

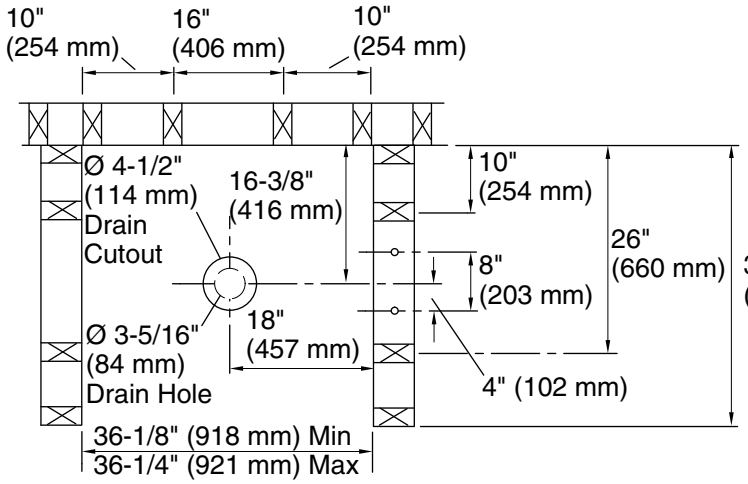

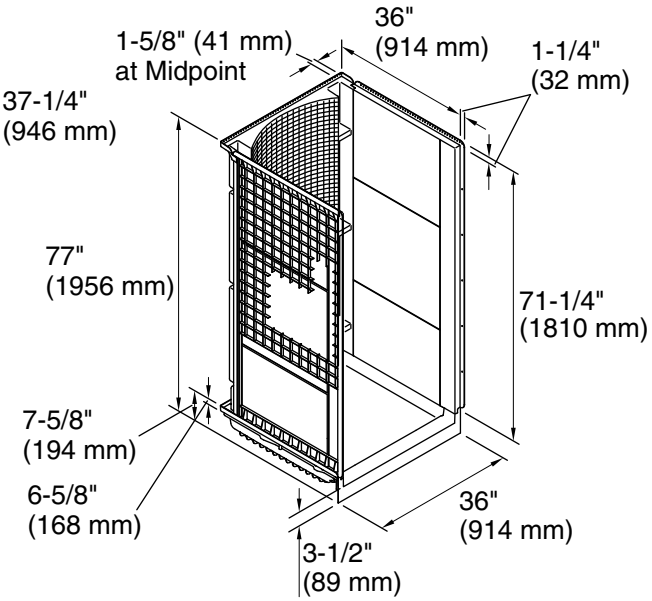

Technical Information

All product dimensions are nominal.

Installation:	Three-wall alcove
Drain location:	Center
Minimum flat for door:	3-1/4" (83 mm)
Threshold height:	3-1/2" (89 mm)
Maximum door height:	72" (1829 mm)
Maximum door width:	32-5/8" (829 mm)

Notes

Install this product according to the installation instructions.

Studs should be positioned roughly as shown.

Double studding is recommended for pivot shower door installations.

Base cannot be installed without the wall surround.