Ensemble™ Medley®

60" x 30" Vikrell® bath/shower with Aging in Place backerboards, right drain

71370126

Features

- 16" apron
- Tongue-and-groove walls with snap-together installation
- High-gloss walls
- Molded-in shelves
- Aging in Place backerboards
- Innovative Dry-Block™ seal and channeled water containment system form watertight seams

Material

- Made from solid Vikrell® material for strength, durability, and lasting beauty

Installation

- Alcove
- Right drain
- Caulk-free installation

Recommended Products/Accessories

K-23726 Drain treatment
K-23733 Vikrell® cleaner

Included Components

71374106 60" x 30" Vikrell® bath/shower wall set with Aging in Place backerboards
71171120 60" x 30" Vikrell® bath, right drain

Codes/Standards

CSA B45.5/IAPMO Z124
ASTM E162
ASTM E662
HUD, UM Bulletin 73
IAPMO Certification

STERLING® Vikrell® or Acrylic Baths and Shower Bases Ten-Year Limited Warranty

See website for detailed warranty information.

Available Colors/Finishes

Color tiles intended for reference only.

Color	Code	Description
	0	White

Ensemble™ Medley®

60" x 30" Vikrell® bath/shower with Aging in Place backerboards, right drain

71370126

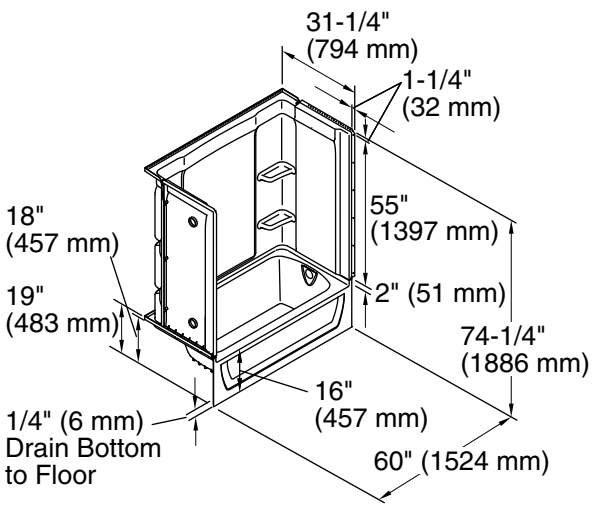

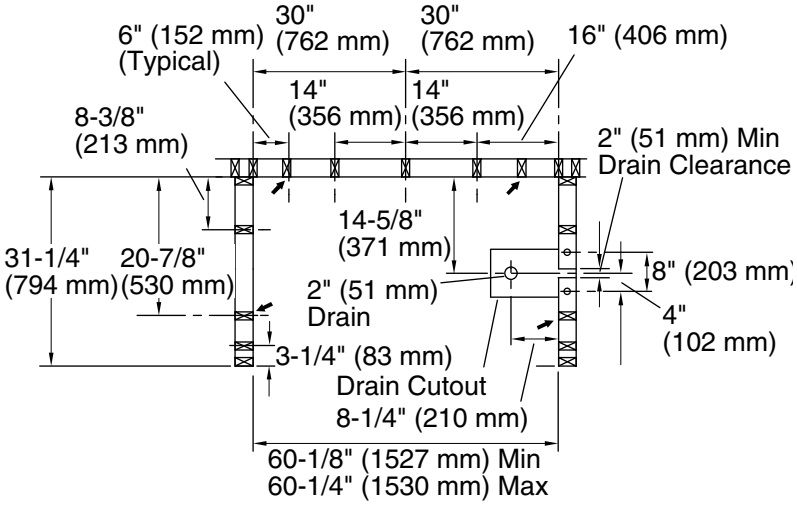

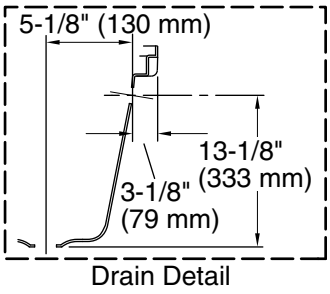

Drain Detail

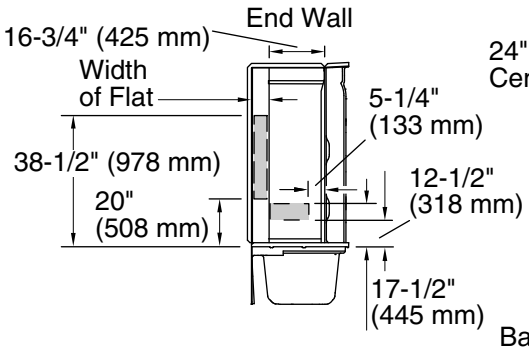

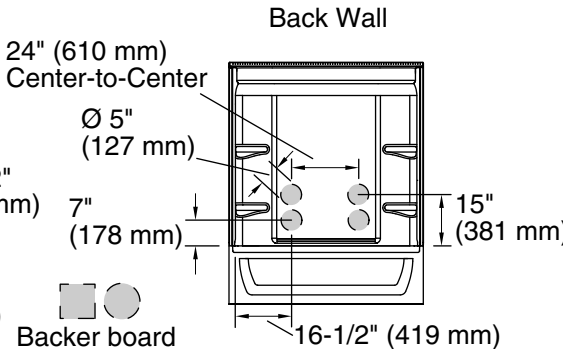

Technical Information

All product dimensions are nominal.

Drain location:	Right
Basin area, bottom:	45" x 20" (1143 mm x 508 mm)
Basin area, top:	53" x 23" (1346 mm x 584 mm)
Water depth:	11-1/4" (286 mm)
Water capacity:	44 gal (166.6 L)
Maximum door height:	56-3/4" (1441 mm)
Maximum door width:	57-11/16" (1465 mm)

Notes

Install this product according to the installation instructions.

Studs should be positioned as shown.

Double studding is recommended for pivot shower door installations.

Attach grab bars at the specified backerboard locations only.