STERLING
A KOHLER COMPANY

Ensemble™

60" x 30" Vikrell® bath, left drain

71171110

VIKRELL
MATERIAL STRENGTH. PROVEN PERFORMANCE.™

Features

- Designed with a 16" apron
- Durable high-gloss finish provides a smooth, shiny surface that is easy to clean
- Gently sloping bath with integral apron
- 2" wainscot allows tile-down installation above bath deck
- Can be installed with wall set 71374100

Material

- Made from solid Vikrell® material for strength, durability, and lasting beauty

Recommended Products/Accessories

K-23726 Drain treatment
K-23733 Vikrell® cleaner

ADA

Codes/Standards

CSA B45.5/IAPMO Z124
ASTM E162
ASTM E662
ADA
ICC/ANSI A117.1
HUD, UM Bulletin 73
IAPMO Certification

STERLING® Vikrell® or Acrylic Baths and Shower Bases Ten-Year Limited Warranty

See website for detailed warranty information.

Available Colors/Finishes

Color tiles intended for reference only.

Color	Code	Description
	0	White

Ensemble™

60" x 30" Vikrell® bath, left drain

71171110

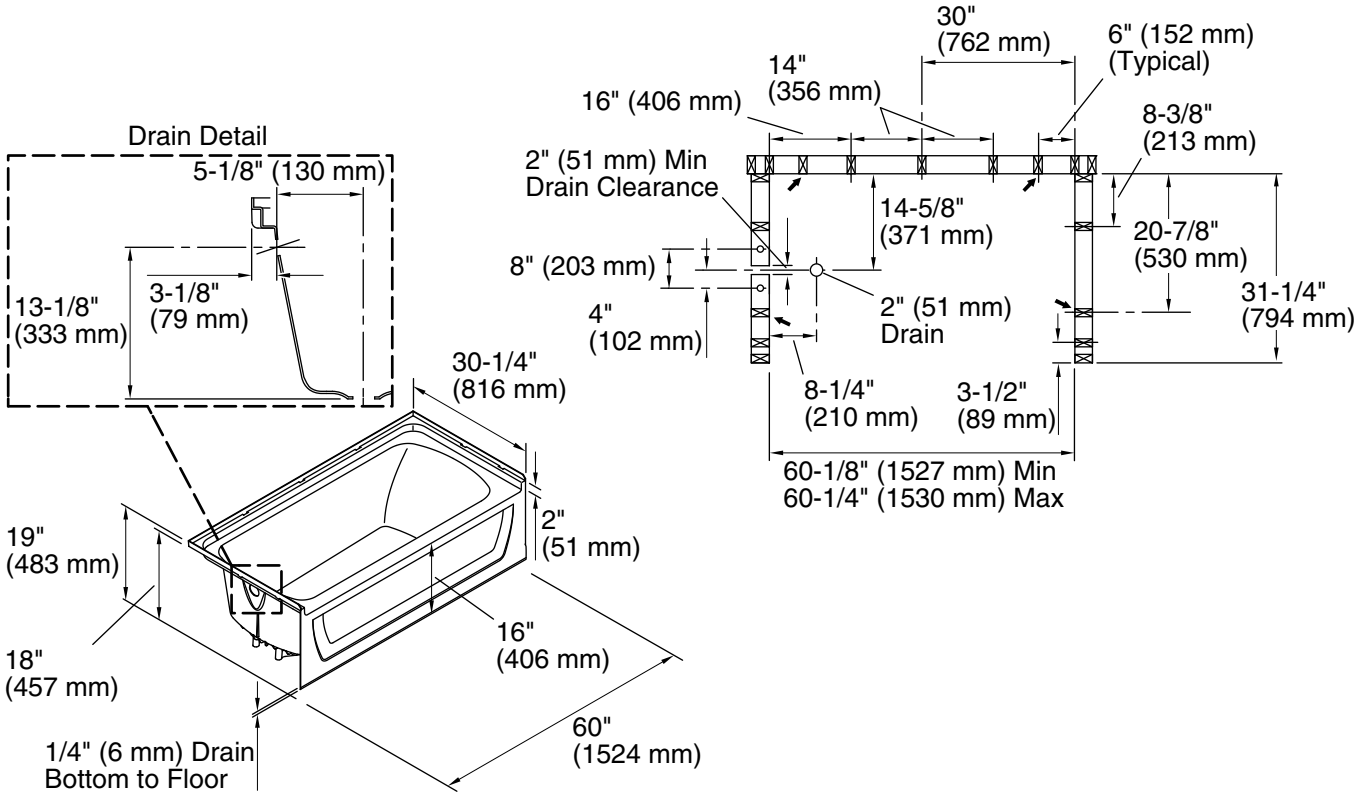

Technical Information

All product dimensions are nominal.

Drain location:	Left
Basin area, bottom:	45" x 20" (1143 mm x 508 mm)
Basin area, top:	53" x 23" (1346 mm x 584 mm)
Water depth:	11-1/4" (286 mm)
Water capacity:	44 gal (166.6 L)
Maximum door width:	57-11/16" (1465 mm)

Notes

Install this product according to the installation instructions.

Studs should be positioned roughly as shown.

Double studding is recommended for pivot shower door installations.

ADA compliant when installed to the specific requirements of these regulations.