Deluxe

65-1/2" H sliding shower door with 1/8"-thick glass

572114-G10

Features

- Reversible top track and towel bar allow a choice between rounded or accented design
- Tempered glass ensures enhanced safety and durability
- Continuous guide mechanism for smooth, quiet sliding action and easy cleaning

Material

- Framed, 1/8" (3 mm) thick Pebbled tempered glass
- Anodized aluminum prevents rust and corrosion

Installation

- Fits opening widths 43-7/8" – 48-7/8" (1114 – 1241 mm)
- 65-1/2" (1664 mm) high, with 63-5/16" (1608 mm) minimum head clearance
- 3/8" (10·mm) out-of-plumb adjustability on each side simplifies installation
- Door can be installed to open to the left or right to suit your bathroom layout
- For residential use only
- Not for use in hospitality

Codes/Standards

ANSI Z97.1
CAN/CGSB-12.1
CPSC 16CFR 1201

STERLING® Bath and Shower Doors Five-Year Limited Warranty

See website for detailed warranty information.

Available Colors/Finishes

Color tiles intended for reference only.

Color	Code	Description
	N	Nickel

Available Glass Options

Code	Description
G10	Pebbled

Deluxe

65-1/2" H sliding shower door with 1/8"-thick glass

572114-G10

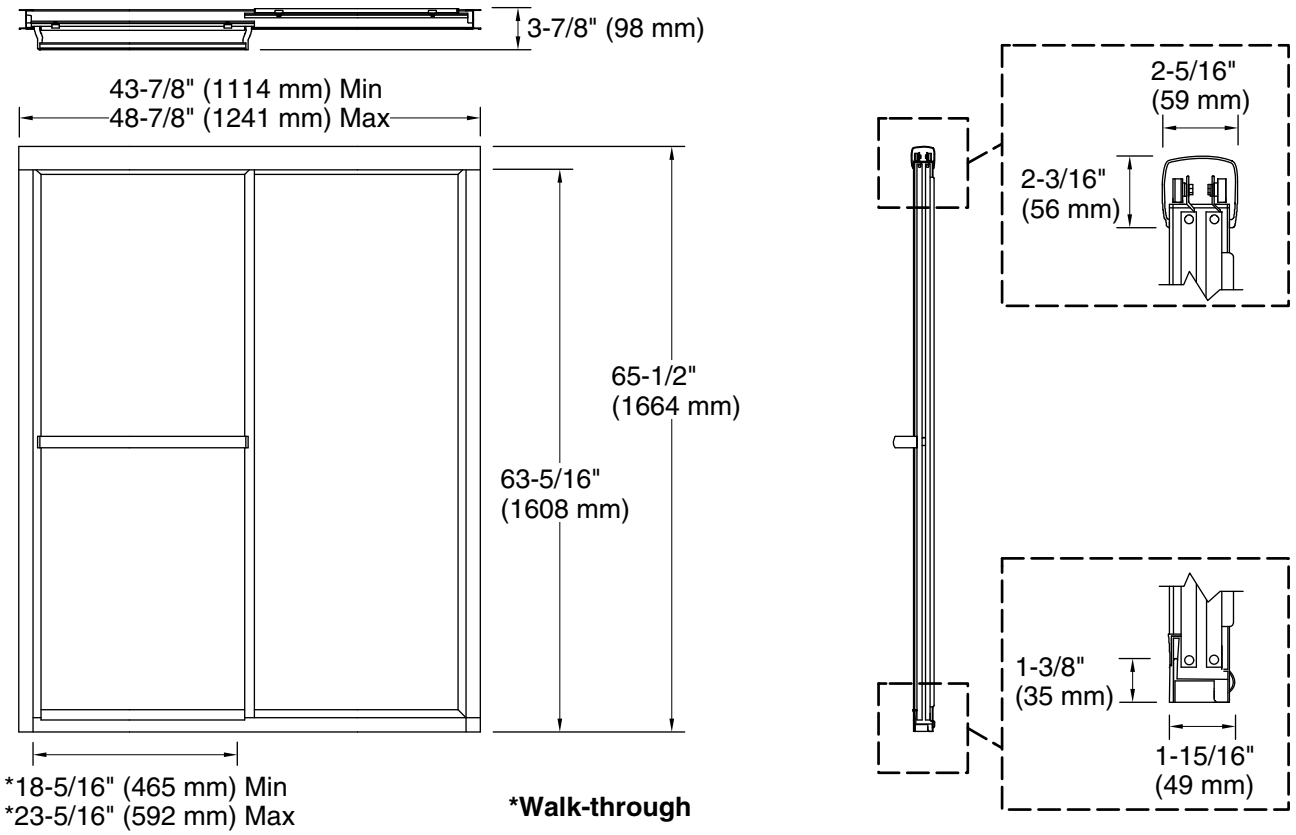

Technical Information

All product dimensions are nominal.

Base-To-Wall Radius – Max:	1/2" (13 mm)
Shower Ledge Min Flat:	1-7/8" (48 mm)
Shower Wall Min Flat:	2-5/16" (59 mm)

Notes

The vertical opening should be a minimum of 67" (1702 mm) to allow for installation clearance.