STERLING
A KOHLER COMPANY

Karsten®

Two-piece elongated dual-flush toilet

402087

Features

- Two-piece design.
- Elongated bowl.
- Comfort Height® elongated bowl.
- Choice of 0.8 gallon flush for liquid or light waste and 1.6 gallon flush for bulk or solid waste.
- Dual Force flushing technology.
- LEED-compliant.

Installation

- Standard 12" (305 mm) rough-in.

Recommended Products/Accessories

K-4636 Cachet® Quiet-Close™ Elongated Toilet Seat
K-5588 Purefresh® Elongated Toilet Seat
K-4108 C³®-230 Elongated cleansing toilet seat
K-5420 Low-Profile Bolt Caps
K-23726 Drain treatment

Included Components

Product consists of:
402023 Toilet tank
402086 Elongated toilet bowl
Additional Components:
Bolt caps (pair)
Tank cover
tank hardware accessory pack
trip lever

WaterSense Meets EPA Criteria
Certified by IAPMO R&T

Codes/Standards

ASME A112.19.2/CSA B45.1
DOE - Energy Policy Act 1992
EPA WaterSense®
California Energy Commission (CEC)

STERLING® Warranty - Toilets and Lavatories

See website for detailed warranty information.

Available Colors/Finishes

Color tiles intended for reference only.

Color	Code	Description
	0	White

STERLING
A KOHLER COMPANY

Karsten®

Two-piece elongated dual-flush toilet

402087

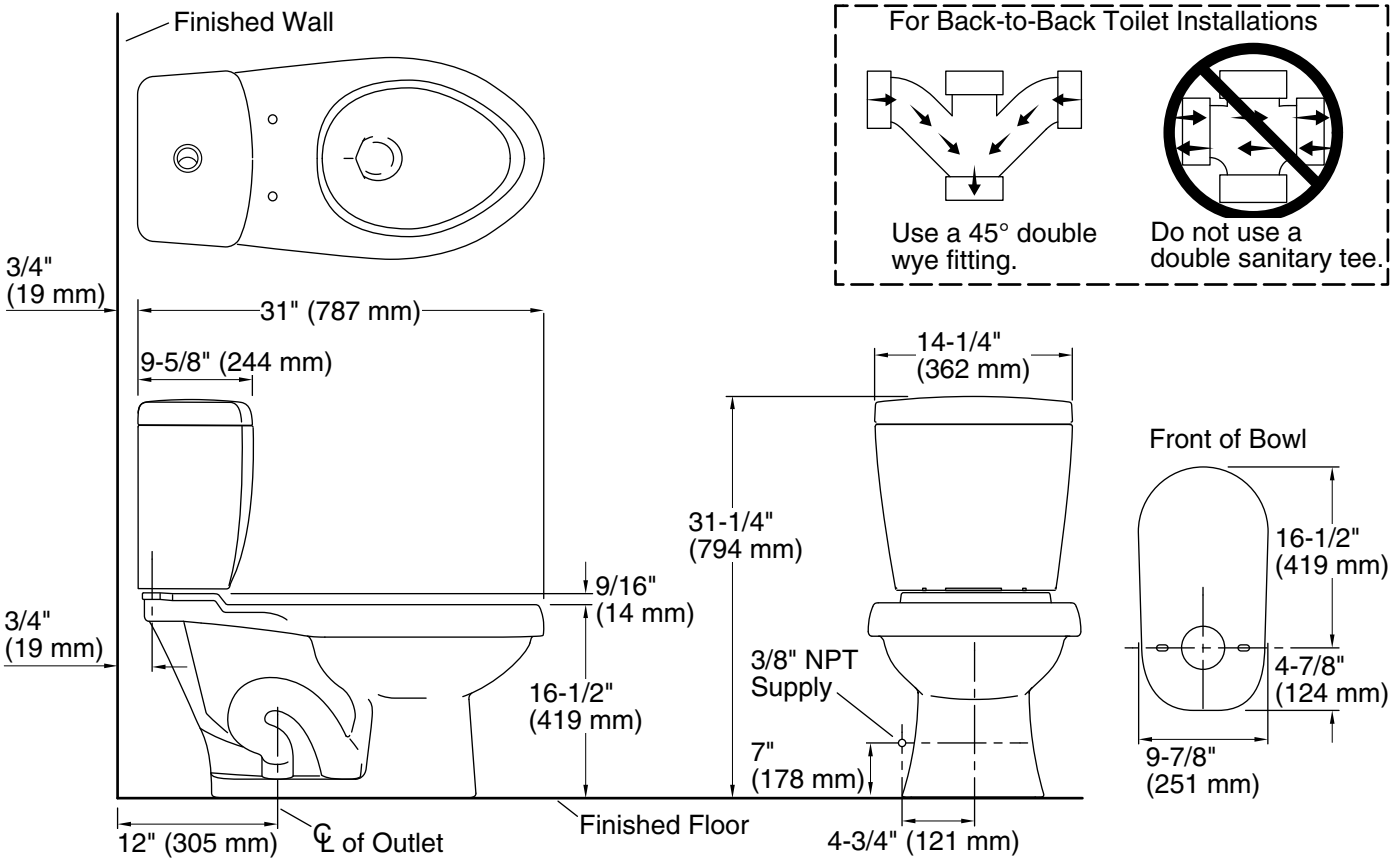

Technical Information

All product dimensions are nominal.

Toilet type:	Two-piece, Floor-mount
Waste Outlet:	Floor
Bowl shape:	Elongated
Trap passageway:	2-1/2" (64 mm)
Water Consumption	
Full:	1.6 gpf (6 lpf)
Reduced:	0.8 gpf (3 lpf)
Water surface size:	4-1/2" x 5-3/4" (114 mm x 146 mm)
Rough-in:	12" (305 mm)
Seat-mounting holes:	5-1/2" (140 mm)

Notes

Install this product according to the installation instructions.

Measure your actual product for roughing-in details.