INSTALLATION

General

Vessel washbasins can be fitted to sit on a countertop or partly inset into it. They may also be wall mounted using a special bracket.
You can choose between a wall-mounted or countertop tap installation, depending upon the setting and style you desire. A wall-mount tap is recommended.

Install the Vessel

1. Make sure that the vessel is installed by a competent installer.
2. Before installation carefully inspect the new item for any signs of damage.
3. Install the water supplies and the drainage pipework.
3. Make sure that the counter/vanity unit is clean and dry.
4. Position the installation template on the countertop.

   For wall-mount taps: ensure sufficient spout overhang into the vessel.

   For countertop taps: pay special attention to the spout and handle fit clearances when locating the taps.

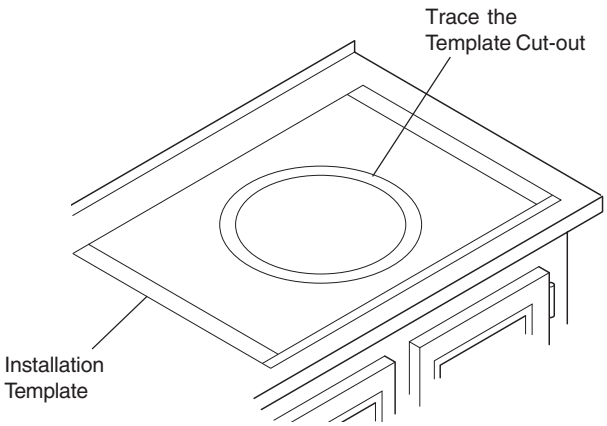

5. Carefully cut out the opening following the pencil line traced from the template.
6. Temporarily position the vessel into the counter and check for fit.
7. Remove the vessel and place carefully to one side.
8. Drill the holes for the taps (if mounting on the countertop), make sure that there is adequate clearance between the taps and the backsplash, and the taps and the vessel edge.
9. Fit the taps in accordance with the manufacturer's instructions.
10. Install the drain in accordance with the manufacturer's instructions

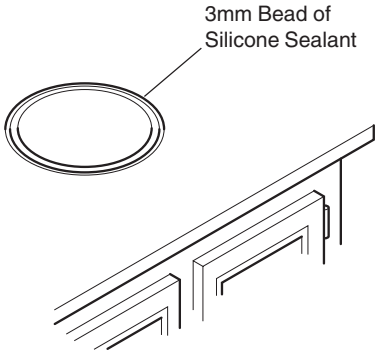

11. Apply a 3 mm bead of silicone sealant around the edge of the cutout hole. Apply the sealant approximately 6 mm away from the cutout hole edge.

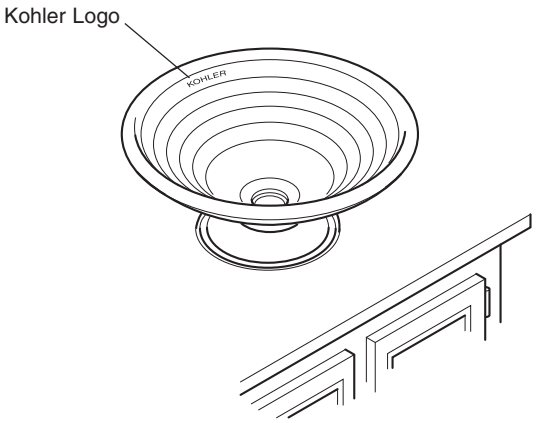

12. Carefully place the vessel in position.

    Note! If there is a Kohler logo on the vessel, ensure it is positioned ast the back.
13. Remove any excess silicone sealant with a clean cloth.
14. Allow the silicone sealant to cure before proceeding with the installation.
15. Connect the taps to the water supply.
16. Connect the drain
17. Turn on the water supply and check for any leaks.

USER MAINTENANCE

Cleaning

Caution! Risk of product damage.

Many cleaners contain abrasive and chemical substances, and should not be used for cleaning stainless steel, enamel, plated or plastic fittings.

These finishes should be cleaned using a mild washing up detergent or soap solution, rinsed and then wiped dry with a soft clean cloth.