KOHLER®

SERVICE PARTS

零 件 图

艾瑞

ATOM

Swivel Kitchen Faucet (Upright Handle)

1471231 单把厨房龙头 直杆型把手

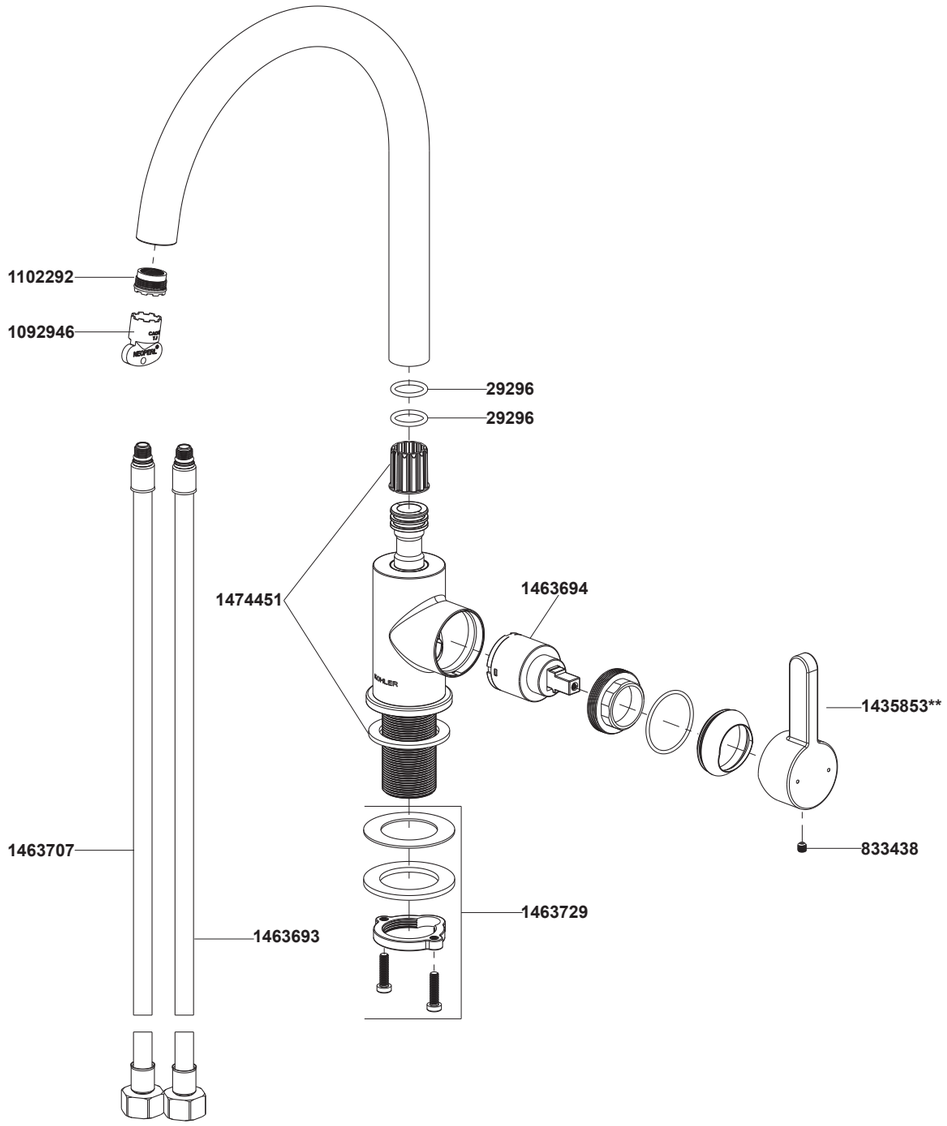

**订购时请说明颜色编号

**Color code must be specified when ordering

KOHLER®

INSTALLATION INSTRUCTIONS

安装说明书

艾瑞

ATOM

Swivel Kitchen Faucet (Upright Handle)

1471231 单把厨房龙头 直杆型把手

安装之前 / BEFORE YOU BEGIN

所有的资料是按最新出版的产品资料编写而成。科勒公司保留任何时候不经通知即可改变产品特性、包装或产品可供类型的权利。

All information is based on the latest product information available at the time of publication. Kohler Co. reserves the right to make changes in product characteristics, packaging, or availability at any time without notice.

说明书包括重要的安装、保养及清洁方面的内容，请把这些资料交给用户阅读。

Please leave these instructions for the consumer. They contain important information.

注意事项：
1. 检查供水管有无损坏，如有需要，进行替换。
2. 一定要先彻底冲洗供水管以清除管道中的杂质。
3. 尽可能在安装厨盆之前安装水龙头。

NOTES:
1. Inspect the supply pipes for damage and leakage. Replace and maintain as necessary.
2. Flush the water supply pipes thoroughly to remove any debris.
3. If possible, install this faucet before installing sink.

使用说明 / HANDLE OPERATION

轻轻提起把手，顺时针旋转把手为冷水，逆时针旋转把手为热水。

Lift the handle gently. Turn clockwise for cold water, turn counter-clockwise for hot water.

安装尺寸 / ROUGH-IN DIMENSIONS

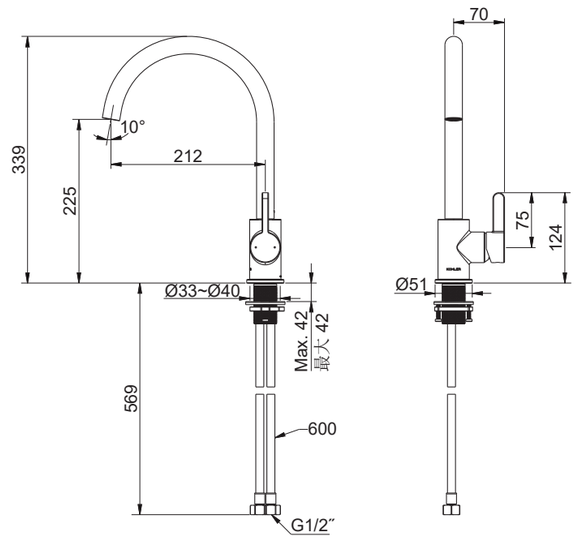

安装步骤 / INSTALLATION

如何安装水龙头

How to Install the Faucet

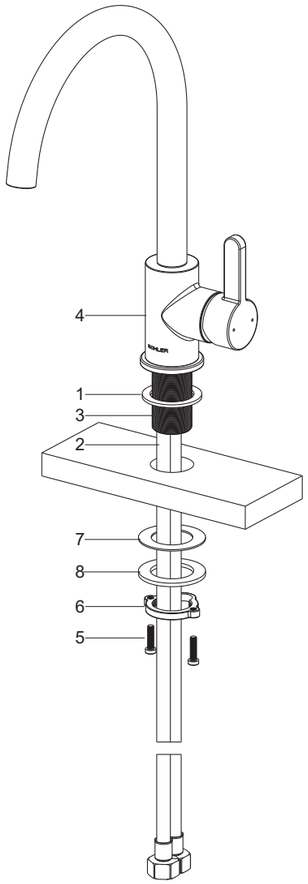

将垫片(1)穿过软管(2)和牙管(3)嵌入到水龙头(4)底部凹槽中。

Slide the washer(1) over the hoses(2) and shank(3) until it is put into the groove of the faucet(4) bottom.

从厨盆上方将水龙头组件插入安装孔中，使水龙头底部接触台面。

From upside of the sink, insert the faucet assembly into the mounting hole until the faucet bottom contacts the deck.

确保两个螺钉(5)部分旋入安装环(6)。从厨盆下方依次把垫片(7)、金属垫片(8)及装有两个螺钉的安装环安装到牙管(3)上。调整水龙头位置。旋紧安装环直至垫片紧贴厨盆底部，拧紧螺钉(5)以固定水龙头。

Partially thread two screws(5) into the threaded ring(6). From underside of the sink, place the washer(7), metal washer (8) and threaded ring with two screws over the shank(3). Position the faucet. Thread the threaded ring onto the shank until the washers contact the underside of the sink. Tighten two screws(5) to secure the faucet to the sink.

将软管(2)接到水源上，蓝色软管连接冷水，红色的软管连接热水。

Attach the hoses(2) to water supplies. The blue hose should be connected to cold water. The red hose should be connected to hot water.

安装结果检查 / INSTALLATION CHECKOUT

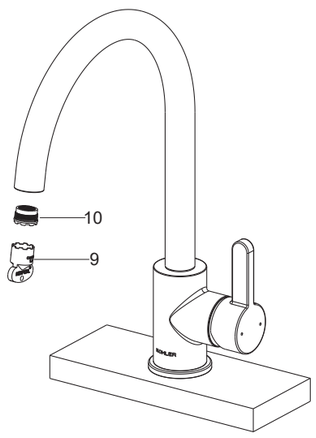

检查并确保所有衔接处都已拧紧。确保把手在关闭位置。

Ensure all connections are tightened and the handle is in the off position.

打开排水系统和主要供水源，检查并修理有漏水的接口。

Open the drain. Turn on main water supply and check for leaks. Repair as needed.

用起泡器工具(9)将起泡器(10)拆下，打开水龙头的冷热水让水流出约一分钟以清除杂质。冲洗起泡器，关闭水龙头，重新装回起泡器。

Remove the aerator(10) with key(9). Turn on the faucet. Run hot and cold water through the spout for about one minute to remove any debris. Remove debris from the aerator. Shut off the faucet and reinstall the aerator.

清洗说明 / CLEANING INSTRUCTIONS

适用于所有加工处理过的表面：以中性肥皂水清洗镀层表面，再以干净的软布彻底擦干整个表面，许多清洁剂，比如氨水、去污粉及洁厕灵等，会对电镀表面造成伤害，切忌使用。

All Finishes: Clean the finish with mild soap and warm water. Wipe entire surface completely dry with clean soft cloth. Many cleaners may contain chemicals, such as ammonia, chlorine, toilet cleaner etc. which could adversely affect the finish and are not recommended for cleaning.

有磨损性的清洁用具或清洁剂也不可使用于科勒牌的水龙头及其配件上。

Do not use abrasive cleaners or solvents on Kohler faucets and fittings.

龙头本体背面标有“LEAD FREE”字样，即产品符合美国AB1953法令的要求。

"LEAD FREE" is marked on the back of the faucet signifying its compliance with the United States AB1953.