KOHLER®

COMPOSED

EXPOSED THERMOSTATIC FAUCET

K-73110T

ALSO K-73164T

Features

- *Brass construction*
- *Durable KOHLER finishes resist corrosion and tarnishing*
- *Directionally adjustable, laminar-flow aerator*
- *Spout reach 127 mm*
- *Adjustable inlet fittings with 15mm tolerance*
- *Precise thermostatic control for added safety*
- *Includes Rain Duet push button, 3 function handshower*

Codes/Standards Applicable

- *GB 18145-2014*
- *GB/T 23447-2009*
- *EN 1111-1998*
- *TIS 2066-2552*
- *QB 2806-2006*

Installation Notes

Install this product according to the installation guide.

Specified Model

Model	Description	Color/Finished		
K-73110T-7	Composed Exposed Bath Shower Thermostatic Faucet	☐ Polished Chrome (CP)	☐ French Gold (AF)	☐ Titanium (TT)
K-73164T-7	Composed Exposed Shower Only Thermostatic Faucet	☐ Polished Chrome (CP)	☐ French Gold (AF)	☐ Titanium (TT)

For a full range of color finishes in your market please contact your local Kohler representative.

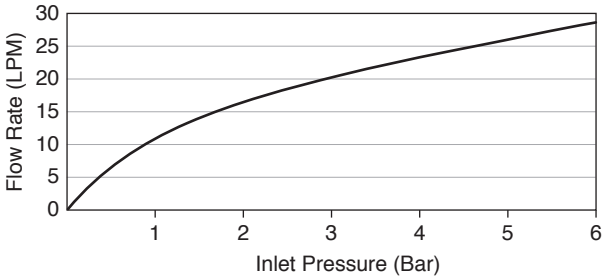

Flow Curve – Bath Spout

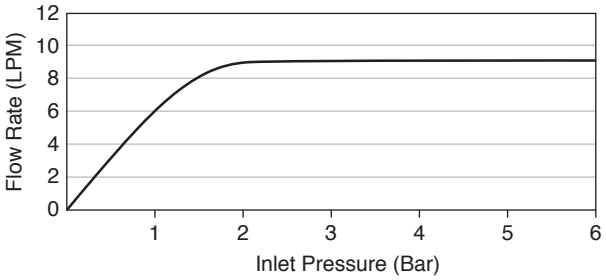

Flow Curve – Handshower

Note: Flow rates are approximate. (1 gallon = 3.785 liters, 1 bar = 14.5 psi)

Dimensions are approximate.
Unit: mm

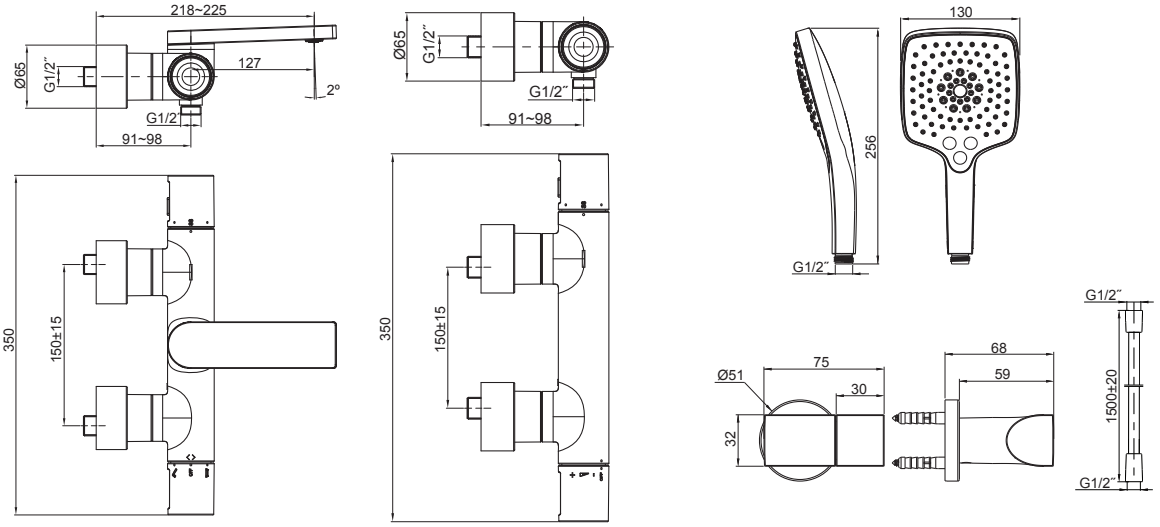

K-73110T-7

K-73164T-7

Product Diagram