# Prolific®
Under-Mount Kitchen Sink
**K-5540**

## Features
- Large single bowl.
- 11-inch depth provides generous workspace.
- No faucet holes.
- Includes bamboo cutting board, two multipurpose grated racks, colander, and washbin.
- Three graduated ledges in basin allow you to place accessories at your preferred height.
- Accessories stack and slide on ledges for a custom arrangement.
- Beveled cone-shape basin slopes into drain, easily disposing debris.
- Medium size cutting board (10"x16") included with sink - covers 1/3 of sink.
- Also available: Large size cutting board 21"x16" - covers 2/3 of sink. (Sold separately # K-23680-NA)
- SilentShield sound-absorption technology offers quieter performance.
- Includes installation hardware.

## Material
- 18-gauge stainless steel.

## Installation
- Under-mount
- Minimum base cabinet width: 33"-36" (33" may require cabinet modifications).

## Recommended Accessories
K-6383 Soap Dispenser
K-8619 Flexible Kitchen Mat
K-8801 Sink Strainer
K-8799 Sink Strainer
K-8624 Dish Scraper

## Components
Product includes:
K-5542 Multipurpose Grated Rack
K-5542 Multipurpose Grated Rack
K-5541 Bamboo Cutting Board
K-5544 Colander and Washbin



## Codes/Standards
ASME A112.19.3/CSA B45.4

## Lifetime Limited Warranty for KOHLER® Stainless Steel Sinks
**Lifetime Limited Warranty for KOHLER® Stainless Steel Sinks**
See website for detailed warranty information.

# Prolific®

Under-Mount Kitchen Sink

**K-5540**

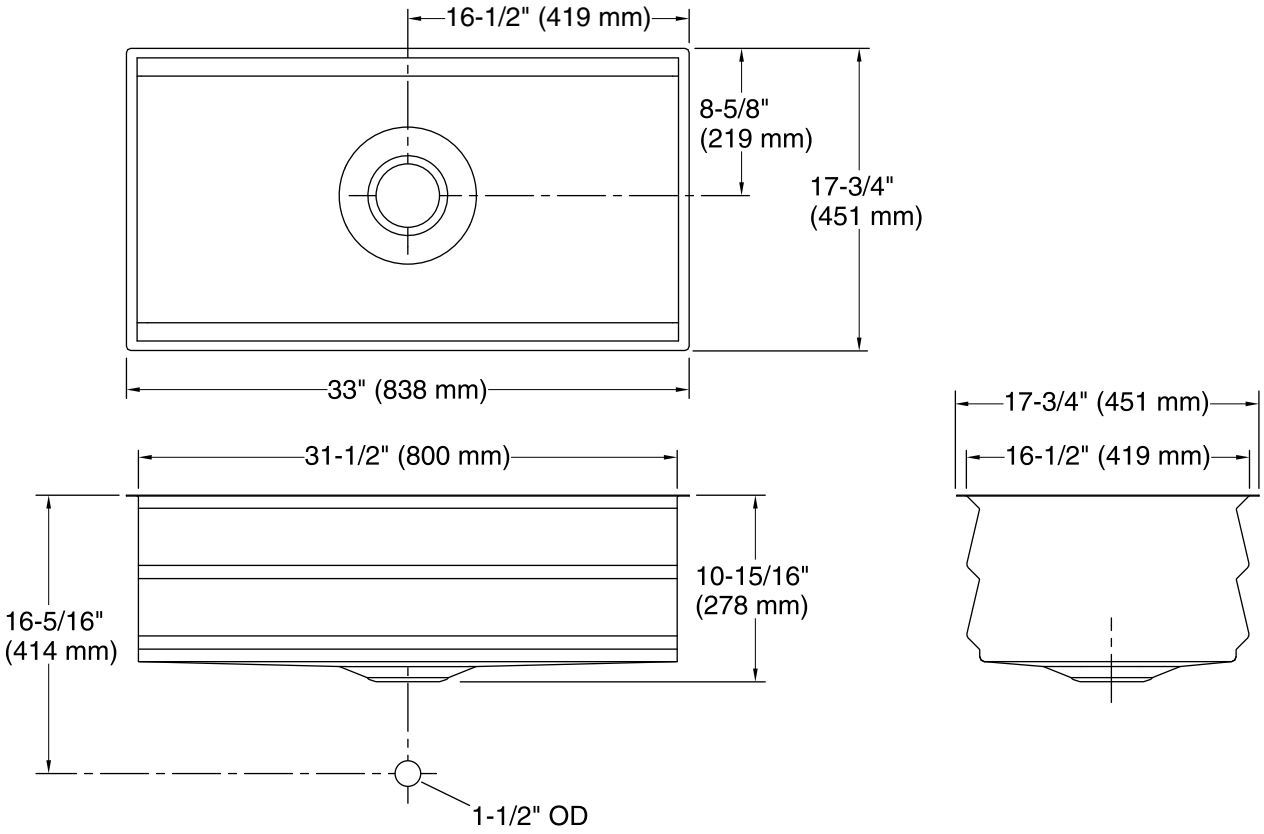


## Technical Information

All product dimensions are nominal.

| | |
|---|---|
| Bowl configuration: | Single |
| Installation: | Under-mount |
| Min. base cabinet width: | 36" (914 mm) |
| Bowl area (Only): | Length: 31-1/2" (800 mm)<br>Width: 16-1/2" (419 mm)<br>Bowl depth: 10" (254 mm)<br>Water depth: 10" (254 mm) |
| Drain hole: | 3-3/4" (94 mm) |
| Template: | 1093327-7, required, included |

## Notes

Install this product according to the installation instructions.