KOHLER®

Vault™
Under-Mount Kitchen Sink
K-3820

Features
- 36-inch minimum base cabinet width.
- Double equal bowls.
- 9-inch depth.
- No faucet holes.
- Rear drain increases workspace in the sink and storage space underneath.
- SilentShield® sound-absorption technology offers quieter performance.
- Includes installation hardware.



Material
- Handcrafted from 18-gauge stainless steel.

Installation
- Under-mount

Recommended Accessories
K-8801 Sink Strainer
K-8799 Sink Strainer

Optional Accessories
K-6429 Utility Rack
K-6432 Saddle Towel Bar
K-6434 Saddle Utility Rack
K-6667 Wood Cutting Board
K-6641 Sink Rack

Components
Product includes:
91915 Hardware Kit

Codes/Standards
ASME A112.19.3/CSA B45.4

Lifetime Limited Warranty for KOHLER® Stainless Steel Sinks
See website for detailed warranty information.

Vault™

Under-Mount Kitchen Sink

K-3820

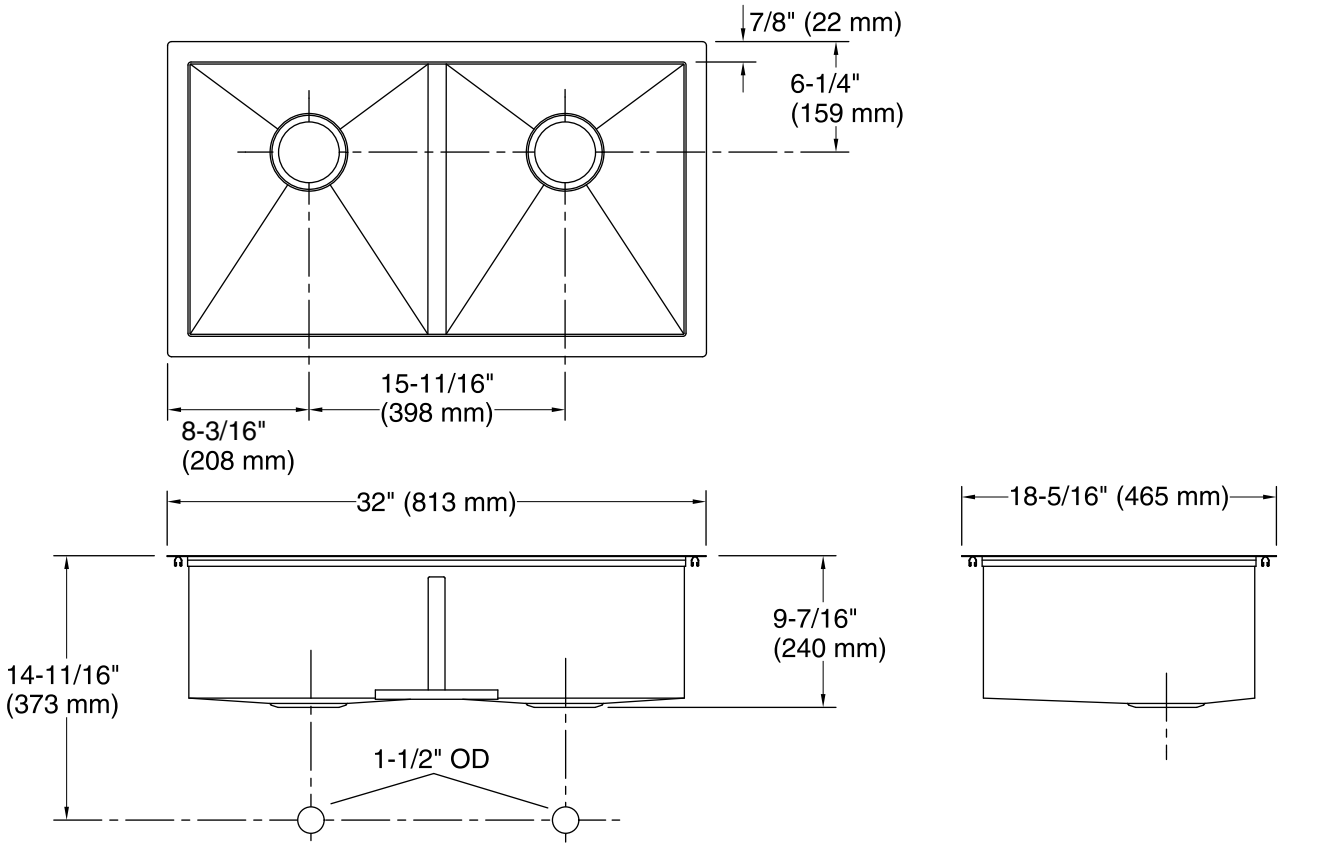

Technical Information

All product dimensions are nominal.

Bowl configuration:	Double equal
Installation:	Under-mount
Min. base cabinet width:	36" (914 mm)
Bowl area (Left):	Length: 14-9/16" (370 mm) Width: 16-9/16" (420 mm) Bowl depth: 9" (229 mm) Water depth: 9" (229 mm)
Bowl area (Right):	Length: 14-9/16" (370 mm) Width: 16-9/16" (420 mm) Bowl depth: 9" (229 mm) Water depth: 9" (229 mm)
Drain hole:	3-7/8" (98 mm)
Template:	1207216-7, required, included

Notes

Install this product according to the installation instructions.

Allow 3/4" (19 mm) clearance beyond the back of the bowl for the wood cutting board (optional accessory).