KOHLER®
Roughing-In

K-4858
PILLOW TALK™
VITREOUS CHINA BIDET

Ordering Information

Accessories/hardware:		
Pillows™ faucet	K-7956-2	recommended
Taboret™ faucet	K-8244	recommended

Product Information

Fixture:	
Configuration	Faucet deck*
Outlet	1-3/4” D.
Spray hole	3/8” D.
Faucet hole	1-3/8” D.
Pop-up rod hole	5/8” D.
Included Components:	
Cover	K-4638
Floor screws	21402
*Kohler faucet required, refer to specification guides.	

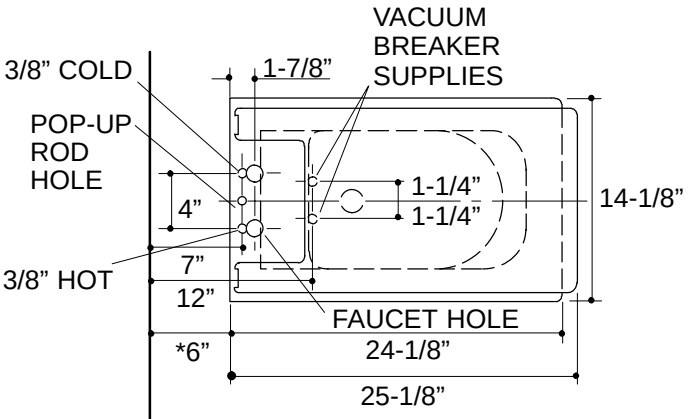

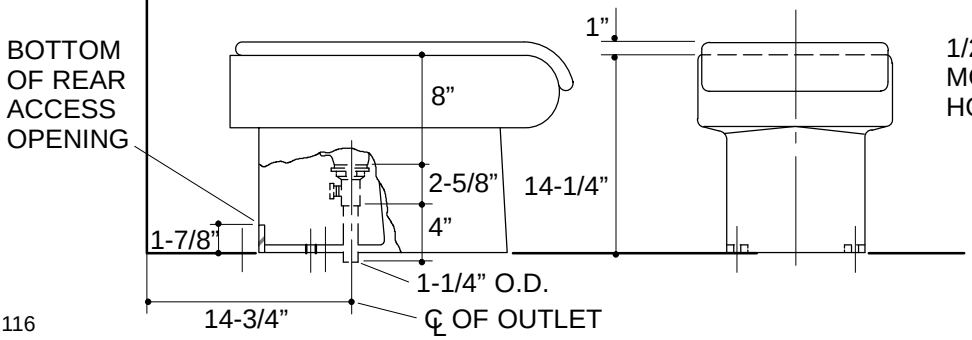

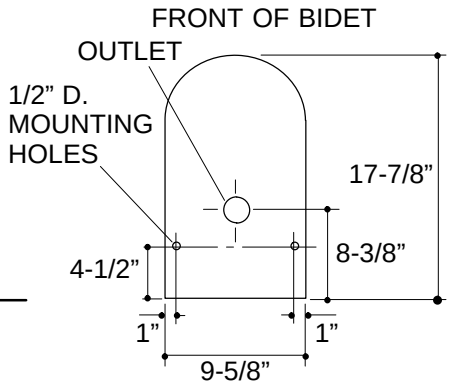

Roughing-In Notes
Fixture dimensions are nominal and conform to tolerances in ASME Standard A112.19.2M.
*6” dimension required to allow for drain and supply connection from rear of bidet.
Install trap in drain line below floor.
Hot and cold and vacuum breaker supply locations should be installed from floor.
If floor supplies are used, avoid roughing-in near rear of base.