KOHLER®
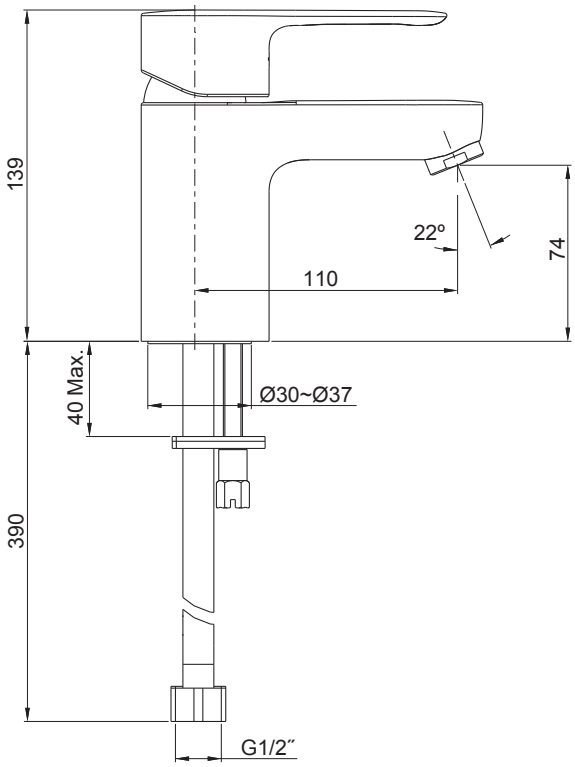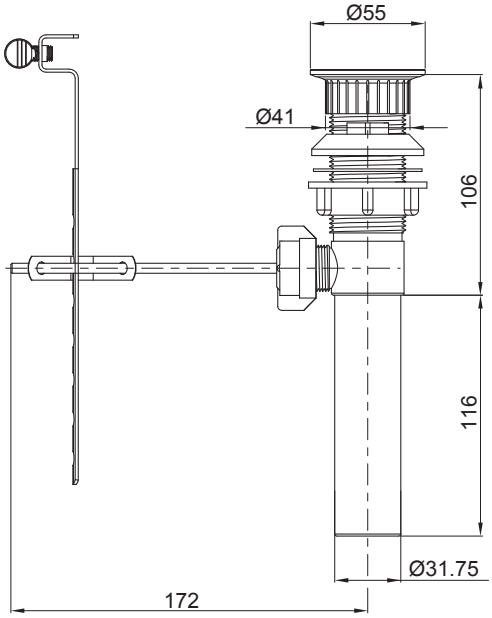
K-16027T-B4