robern

CVSK36
Skaarsgard 36″ Vanity
Specification Sheet

Features

- Three-way mitered joinery on vanity frame
- Mitered thin frame drawer detail
- Top drawer is a plumbing drawer
- Bottom drawer is a plumbing drawer
- Open shelf storage
- Removable glass drawer dividers included

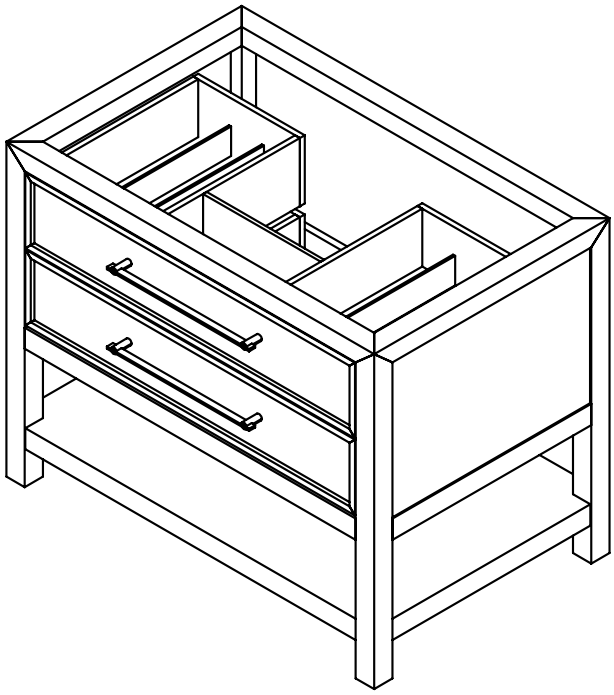

Materials & Construction

- Solid wood and veneer construction
- Full plywood back panel, no cutout
- Dovetailed drawers
- Pre-installed solid stainless steel hardware
- Blum undermount full extension slow close slides
- Durable, moisture resistant polyurethane finish
- Adjustable leveling feet

Options

- Available in:
  CVSK3620469, Rustic Oak paired with Brushed Pewter
- Coordinating mineral cast sink with drain cover, TA36MCO___-8CS8
- Coordinating mirrors available
- Coordinating linen cabinet available

Dimensions

Width: 35-5/8″

Height: 28-1/8″

Depth: 22-3/4″

Model Number Key

PRODUCT LINE	CATEGORY	COLLECTION	WIDTH	FINISH OPTIONS	OPTIONS
C = Craft Series	V = Vanity	SK = Skaarsgard	36″	(See above)	(See above)

USA/Canada: 1.800.877.2376
www.robern.com

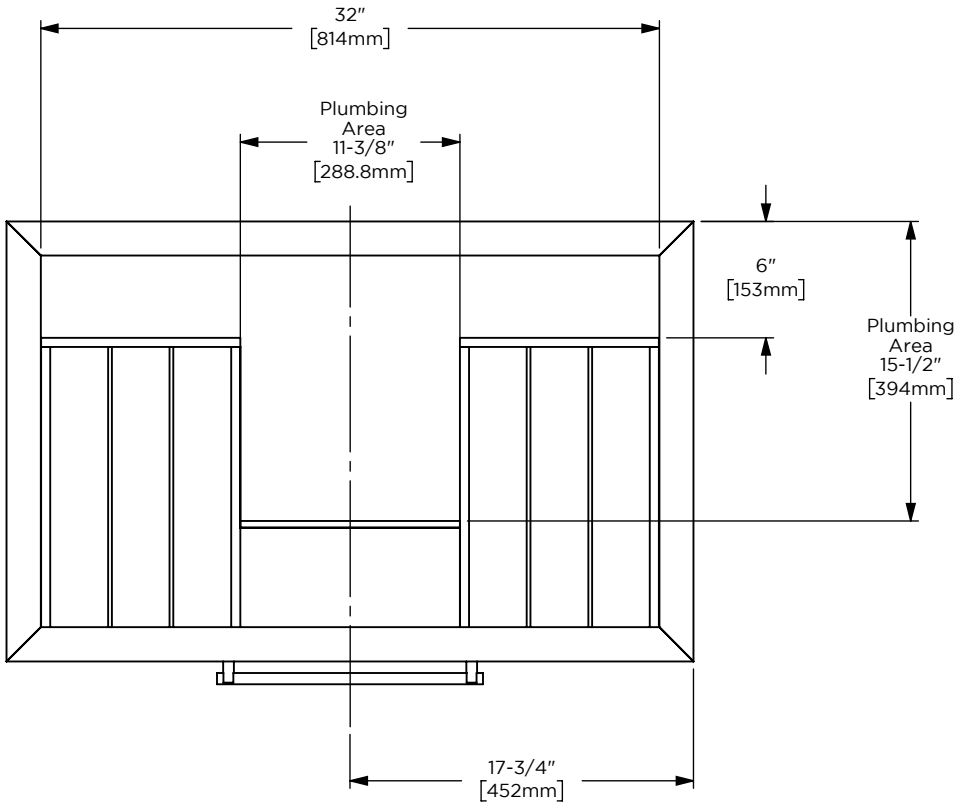

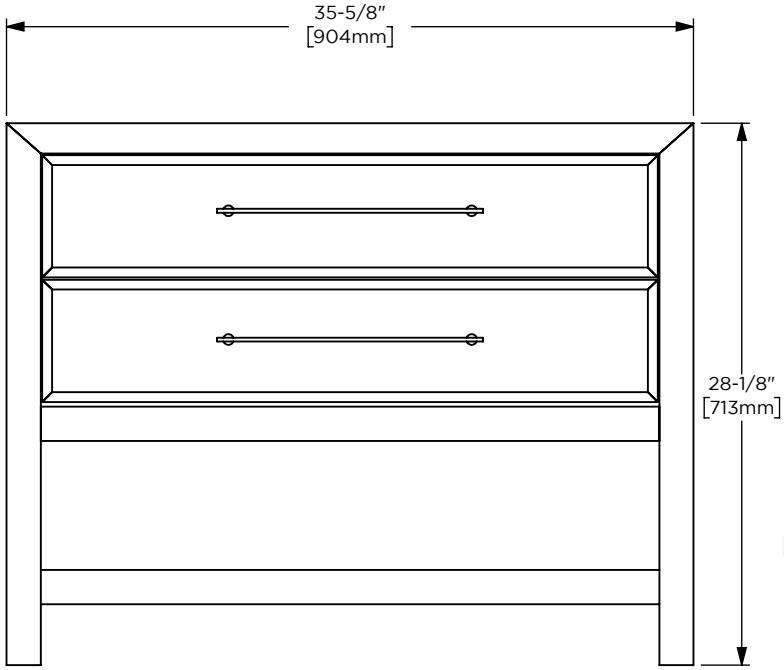

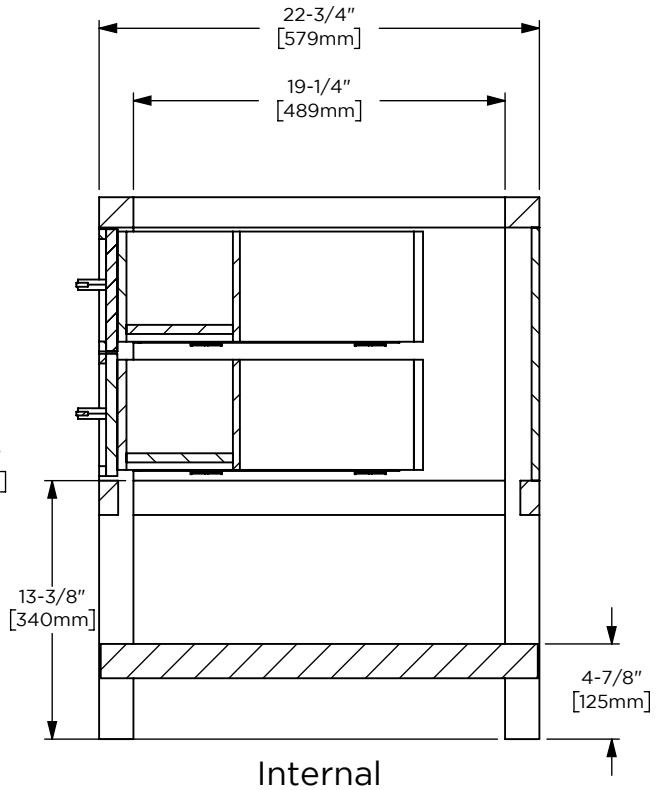

Internal
Construction

robern

TA36MCOXXX-8CS8
36″ Integrated Basin
Specification Sheet

Features

- Mineral cast integrated sink and top
- Removable drain cover

Options

- Available finish:
  102, Matte White
- Pairs with Craft Series Bodo & Skaarsgard 36″ vanities

Dimensions

Width: 36″

Height: 6″

Depth: 23″

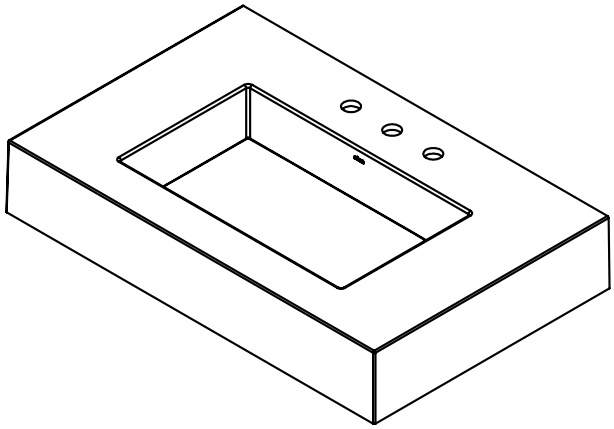

Model Number Key

CATEGORY	DEPTH	WIDTH	LAV TYPE	OVERFLOW	COLORS	DASH	FAUCET HOLES	OPTIONS
T = Top	A = 23″ Depth Fabricated Top	36″	M = Machined/ Molded	C = Center Mounted	(See above)	-	8 = 3 Holes Drilled (Centered on Lav Location)	(See above)

36″ Integrated Basin TA36MCOXXX-8CS8

CB-229-1605 11/10/2021

USA/Canada: 1.800.877.2376
www.robern.com

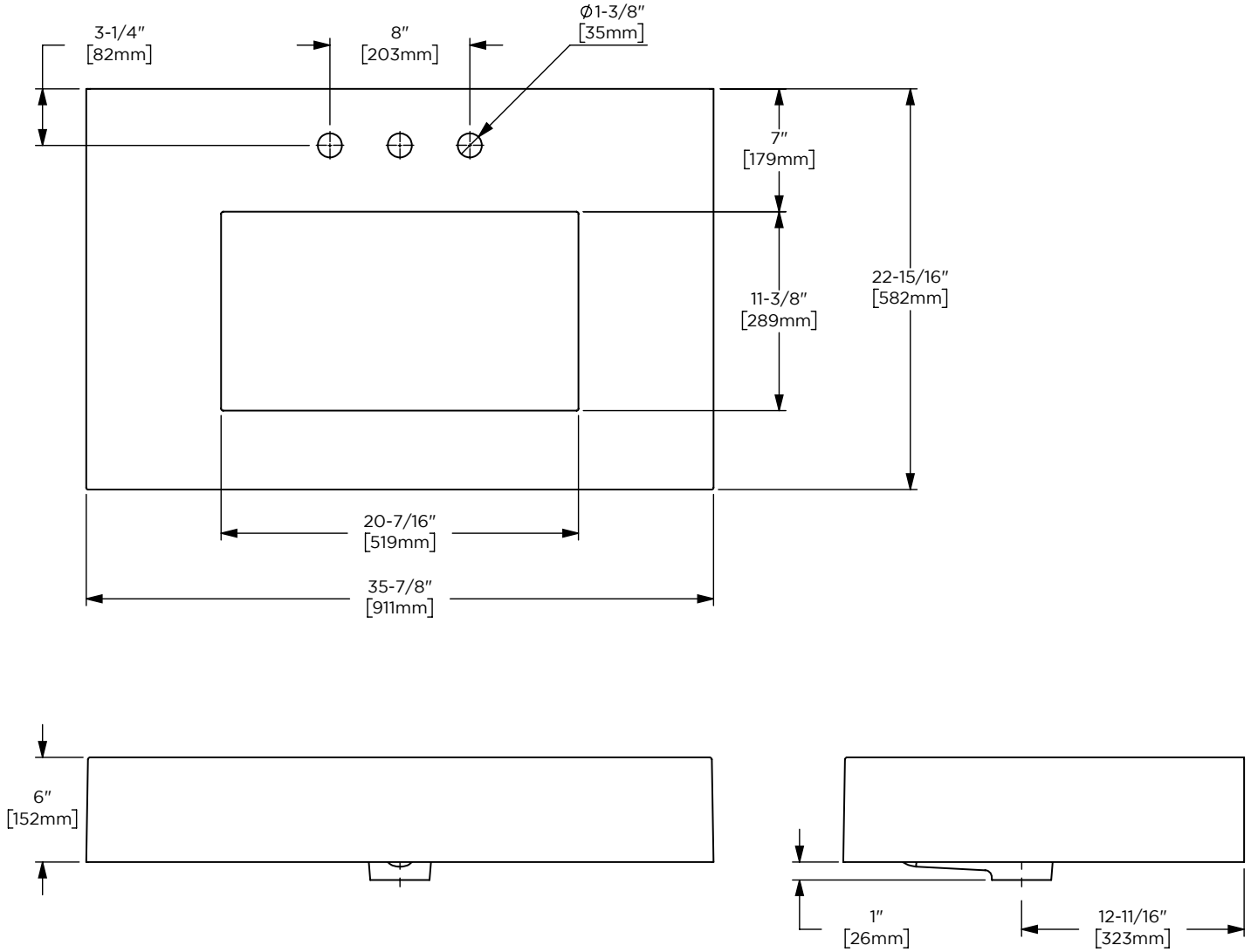
3-1/4″
[82mm]
8″
[203mm]
∅1-3/8″
[35mm]
7″
[179mm]
11-3/8″
[289mm]
22-15/16″
[582mm]
20-7/16″
[519mm]
35-7/8″
[911mm]
6″
[152mm]
1″
[26mm]
12-11/16″
[323mm]