KALLISTA® Pure Paletta® Freestanding Bath Faucet

P24978

FEATURES

- *Solid brass construction for durability and reliability*
- *Single lever handle allows for both ON/OFF activation and temperature setting*
- *Floor-mount installation*
- *9-5/16" (237 mm) spout reach*
- *8 gal/min (30 l/min) flow rate*
- *Integral valve*
- *Includes hardware kit and escutcheon*
- *Complements the Pure Paletta collection*

CODES/STANDARDS APPLICABLE

Specified model meets or exceeds the following:

- *ASME A112.18.1/CSA B125.1*
- *ASSE 1014*

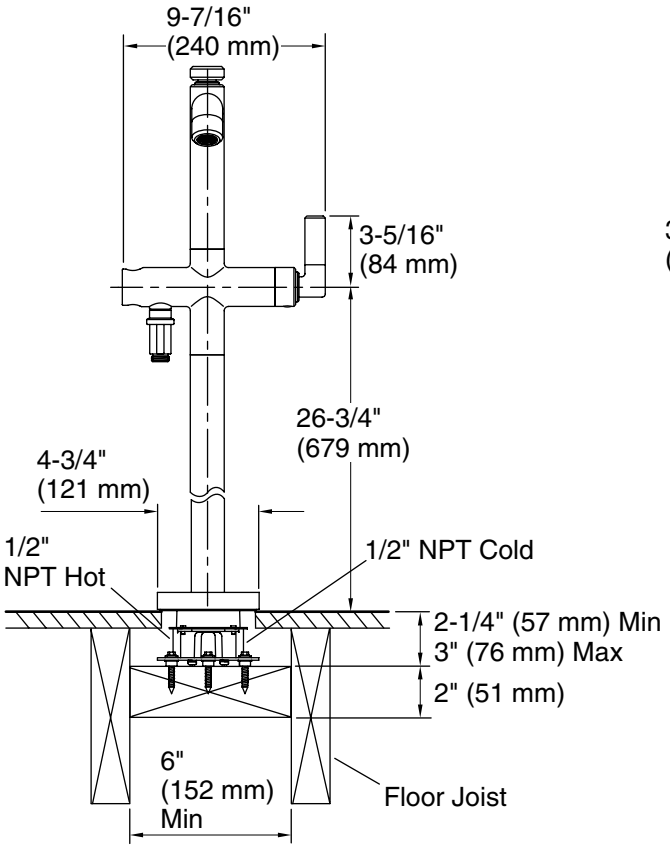

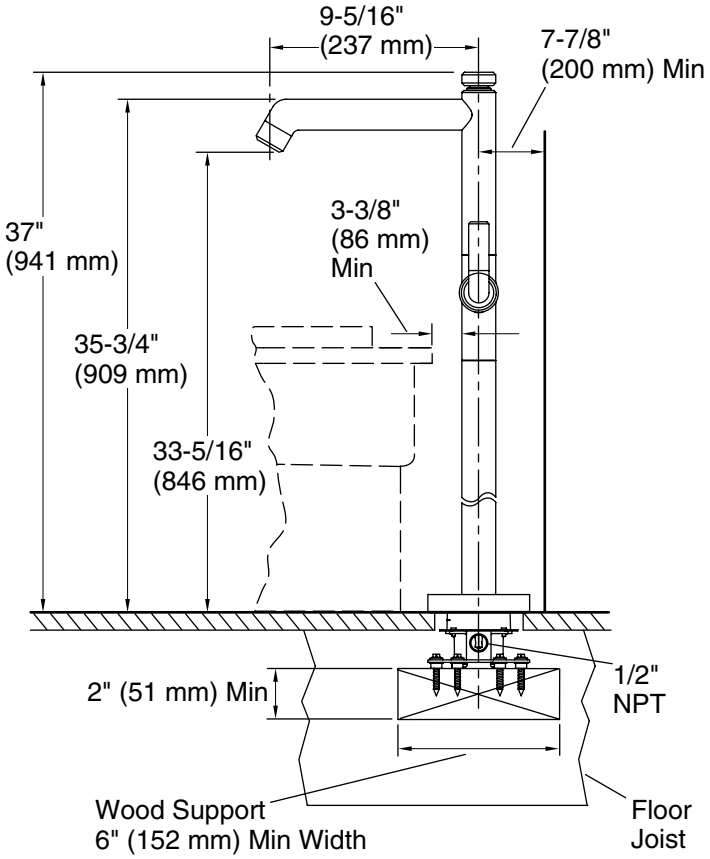

SPECIFIED MODEL			
Model	Description	Finishes	
P24978-00	Pure Paletta Freestanding Bath Faucet	❑ CP Polished Chrome	❑ SN Polished Nickel
Required Accessories			
P25656-00	Laura Kirar Handshower and Hose	❑ CP Polished Chrome	❑ SN Polished Nickel
P20511-00	Multi-Faucet Mounting Block	❑ NA	

We reserve the right to make revisions without notice in the design of products or in packaging unless this right has specifically been waived at the time the order is accepted.

©2021 KALLISTA

Questions? Problems? For additional assistance, please contact KALLISTA's Customer Service Department at 1-888-4-KALLISTA (1-888-452-5547) or kallista.com.