Converter Modbus®/Ethernet

Applicable to the Following Kohler® Controllers:

Generator Set Controllers:

APM402	Decision-Maker® 3000
APM802†	Decision-Maker® 3500
Decision-Maker® 3+	Decision-Maker® 6000
Decision-Maker® 340*	Decision-Maker® 8000†‡
Decision-Maker® 550	

Automatic Transfer Switch Controllers:

M340/M340+*	MPAC™ 1500§
MPAC™ 1000	Decision-Maker® MPAC750/1200/1500§

RSA II and RSA III Remote Serial Annunciators

RSA 1000 (Remote Serial Annunciator) version 2.00 or higher

PM340 Power Monitor *

* Series 340 devices also require Modbus®/KBUS converter kit GM41143-KP3.

† APM802 and Decision-Maker® 8000 controllers can connect directly to the Ethernet.

‡ Converter is required to connect Decision-Maker® 8000 controller to RSA III over the Ethernet.

§ MPAC 1500 and DM MPAC 1500 controllers can connect directly to the Ethernet. The converter is required for SNMP only. DM MPAC 750 and 1200 controllers with the optional Ethernet board can connect directly to the Ethernet.

Standard Features and Functions

- Converts Modbus® RTU protocol to Modbus® TCP/IP for communication via an Ethernet network
- A single converter can support one or more controllers in an RS-485 network
- Software (included) programs IP address and configures communication parameters
- LEDs indicate status:
  - Power
  - Data received
  - Data transmitted
- NEMA type 1 enclosure
- Standard RJ45 jack for Ethernet connection
- Terminal block for RS-485 Modbus® connection
- Baud rate:
  - Selectable 9600 or 19200 on Modbus® RTU side
  - Standard 10/100 Ethernet
- 12 VDC power required:
  - Universal AC power adapter included
  - Can be powered through the generator set battery
- FCC Class A compliant
- Converter allows connection of RSA 1000 (version 2.00 and higher), RSA II, or RSA III master and slave devices to an Ethernet network
- Converter allows Simple Network Management Protocol (SNMP) users to poll or issue trap commands for the controllers listed on page 2.

Modbus® is a registered tradmark of Schneider Electric.

Ethernet Networks

Many facilities use Ethernet networks to connect computers and equipment. The Modbus®/Ethernet converter can be used to connect a single power system device* or network of devices to an existing Ethernet network. Any remote PC connected to that Ethernet network can then monitor the device(s).

A single converter can provide an Ethernet connection to an RS-485 network. See Figure 1. Multiple devices are connected together using RS-485 connections and connected to the Ethernet network through the Modbus®/Ethernet converter. The converter is assigned a unique IP address to identify the connected device or network of devices.

The PC can be located anywhere the site's Ethernet network can be accessed. The PC used to monitor the device(s) must be equipped with a network interface card (NIC). Setting up the Ethernet network and connected computers is the responsibility of the user.

Alternatively, multiple converters can be used to connect individual devices or multiple device networks to the Ethernet. See Figure 2.

Modbus®/Ethernet converters can be used to allow the RSA 1000, RSAII, or RSA III Remote Serial Annunciators to monitor generator set controllers over an Ethernet network. Use one converter to connect the RSA to the Ethernet network, and a second converter to connect the controller to the Ethernet network The converter can also be used to connect RSA slave devices through the Ethernet network.

SNMP Support

Simple Network Management Protocol is used by some network management systems to monitor and/or control managed devices. The Modbus®/Ethernet converter is a managed device that supports SNMP trap commands. This results in reporting faults and events communicated by the following controllers:

- APM402/Decision-Maker® 3000 generator set controller
- Decision-Maker® 3+ generator set controller
- Decision-Maker® 550 generator set controller
- Decision-Maker® 6000 generator set controller
- MPAC™ 1000 ATS controller
- MPAC™ 1500 ATS controller
- Decision-Maker® MPAC1500 ATS controller

The network management system can then manage and send this data to an e-mail address or a phone number to alert selected personnel that action may be required.

DeviceInstaller Software

DeviceInstaller software is provided with the Modbus®/Ethernet converter kit. Use the software to set the converter's IP address and baud rate at installation. The program also allows configuration of the converter for an RSA 1000 master or slave. Complete instructions are provided with the converter kit.

Converter Specifications

Environmental Specifications	
Operating Temperature:	
Converter module	-40° to 70° C (-40° to 158° F)
Optional AC adapter	0° to 40° C (32° to 104° F)
Storage temperature:	
Converter module	-40° to 85° C (-40° to 185° F)
Optional AC adapter	-20° to 85° C (-4° to 185° F)
Humidity	5% to 95% non-condensing

Application Data	
Connections:	
Modbus RTU	Terminal block †
Ethernet	Standard RJ45 jack ‡
Power:	
Supply voltage	10-30 VDC or 120 VAC §
Maximum power draw	2 W

† Belden #9841 or equivalent shielded twisted-pair cable recommended, not supplied.
‡ Mating connector and cable not supplied
§ Universal AC adapter provided.

Dimensions and Weight			
Dimensions mm (in.)	L *	W	H
	111.1 (4.4)	78.8 (3.1)	31.8 (1.25)
Weight kg (lb.)	0.45 (1 lb.)		

* Length includes 13 mm (1/2 in.) mounting tabs

* A device is any of the generator set controllers, transfer switch controllers, or monitoring devices listed on the first page of this document.

Ethernet Connections

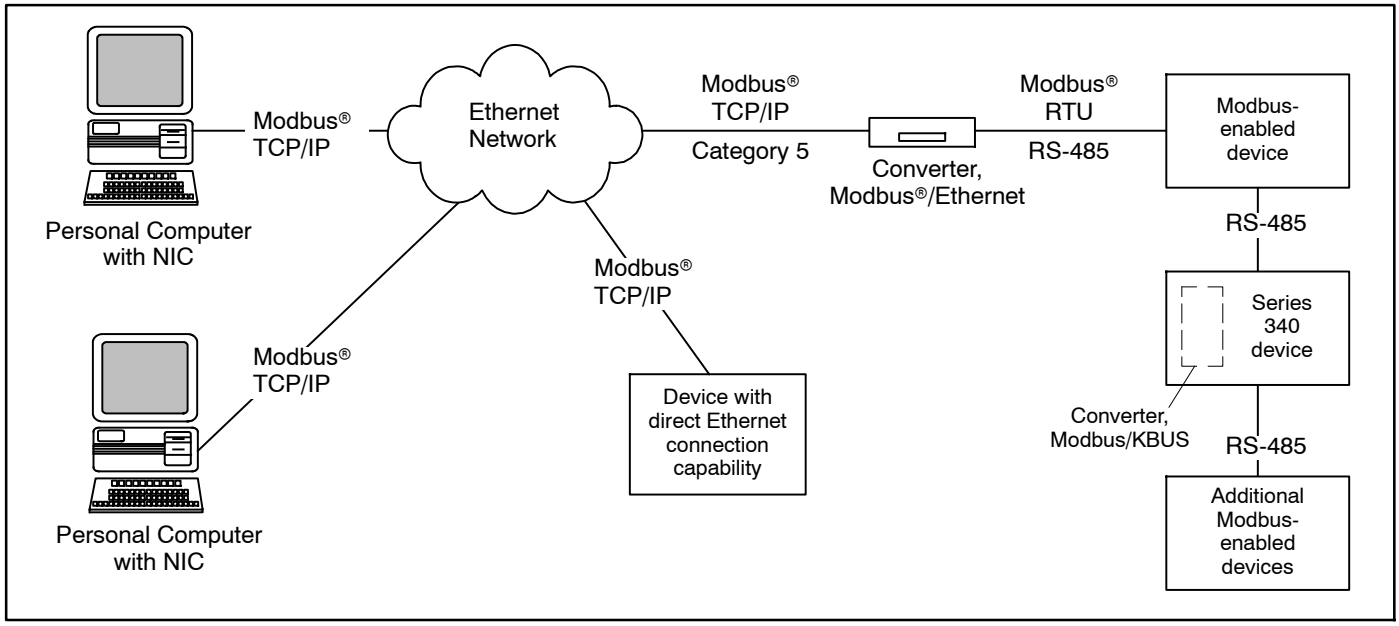

Figure 1 Single Converter Connected to an RS-485 Network

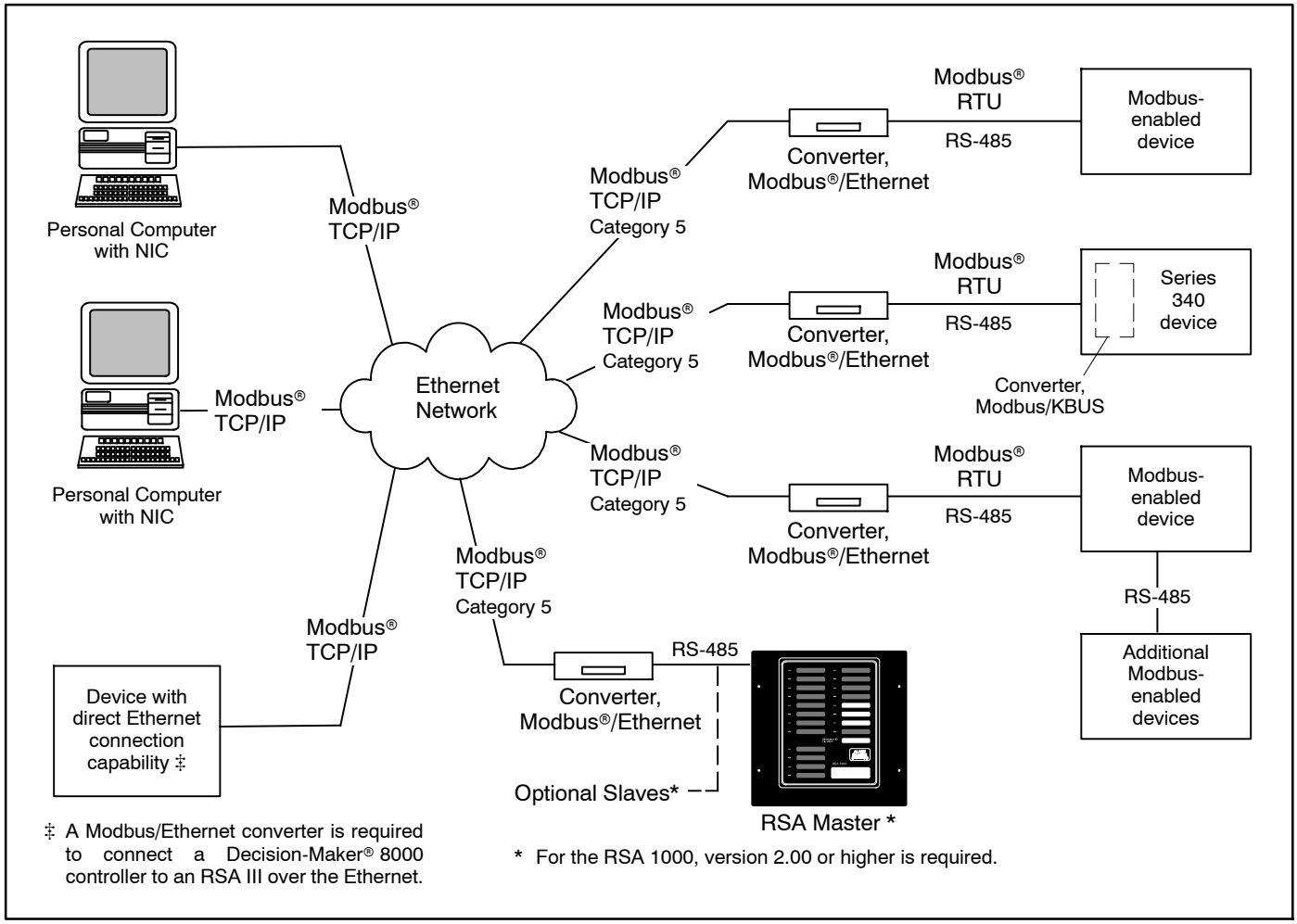

Figure 2 Multiple Converters

KOHLER CO., Kohler, Wisconsin 53044 USA
Phone 920-457-4441, Fax 920-459-1646
For the nearest sales and service outlet in the US and Canada, phone 1-800-544-2444
KOHLERPower.com

Communication Products and Accessories

- ❑ Modbus®/Ethernet converter kits (GM41143-KP2)
- ❑ Ethernet board for Decision-Maker® MPAC 750 and 1200 controllers (GM89855-KP1)
- ❑ Modbus®/KBUS converter kits for the following devices (required for Modbus® communication) (GM41143-KP3):
  - ❑ Decision-Maker® 340 generator set controller
  - ❑ M340 and M340+ transfer switch controller
  - ❑ PM340 power monitor
- ❑ Modbus® communication board for Decision-Maker® 3+ generator set controllers (required for Modbus® communication) (GM32644-KA1/KP1)
- ❑ RS-232/RS-485 port converter (GM41143-KP1)
- ❑ Monitor III software kit with hardware key (GM41141-KP1)
- ❑ Monitor III software kit with hardware key and 60 Hz device modem (GM41141-KP2)

DISTRIBUTED BY:

Availability is subject to change without notice. Kohler Co. reserves the right to change the design or specifications without notice and without any obligation or liability whatsoever. Contact your local Kohler® generator distributor for availability.

© 2005, 2007, 2011, 2018 by Kohler Co. All rights reserved.

G6-79 (M/E Converter) 11/18d