附：产品尺寸图

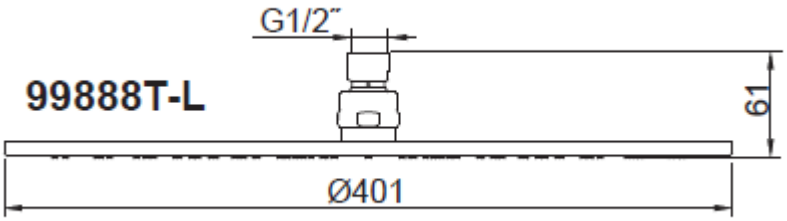

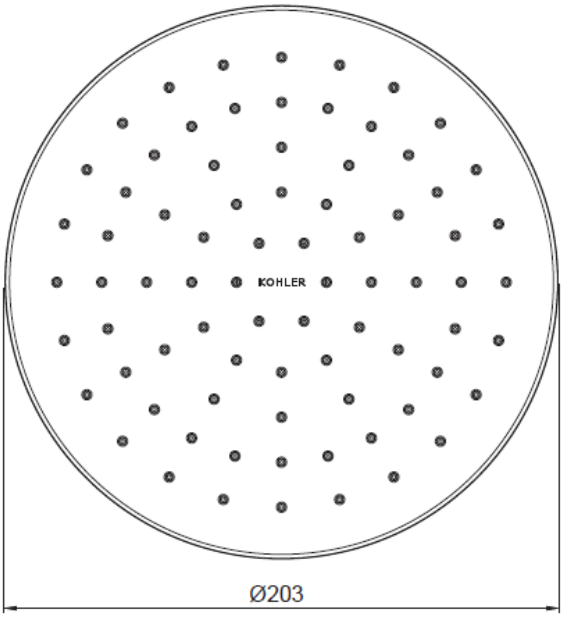

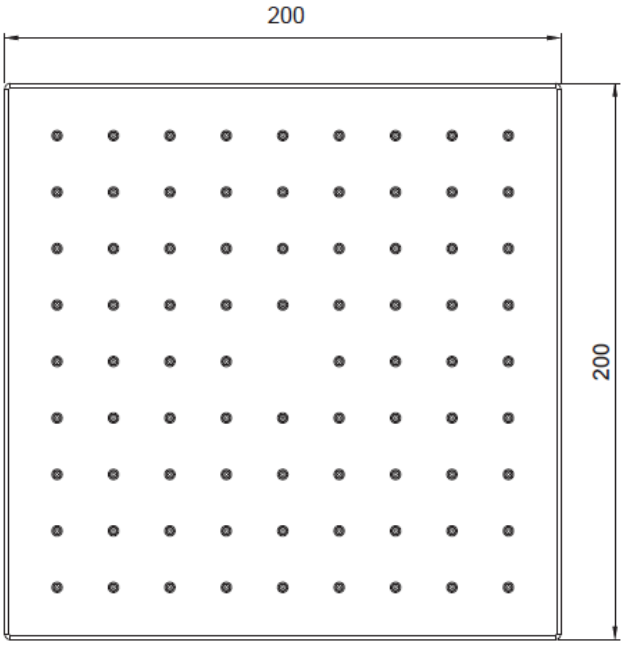

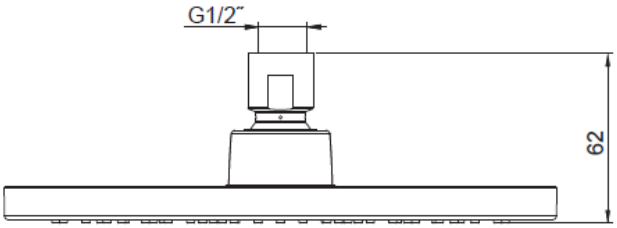

99945T

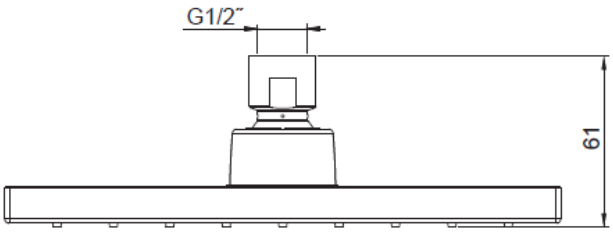

99946T

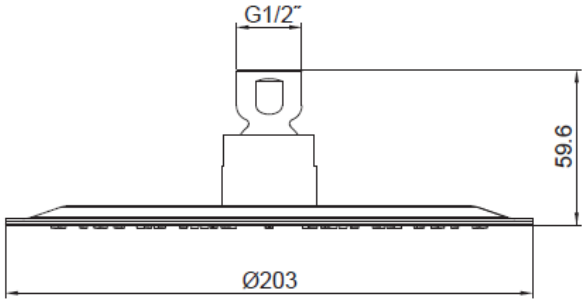

73037T-L

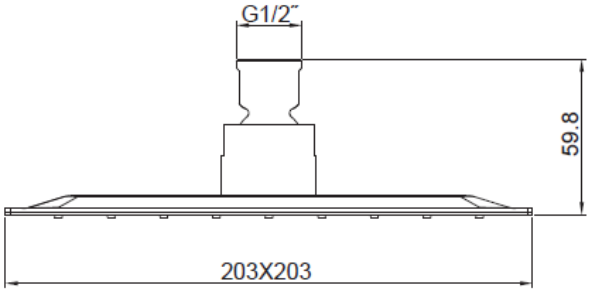

73038T-L

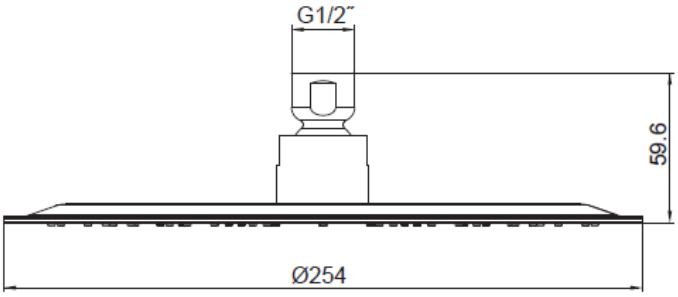

73039T-L

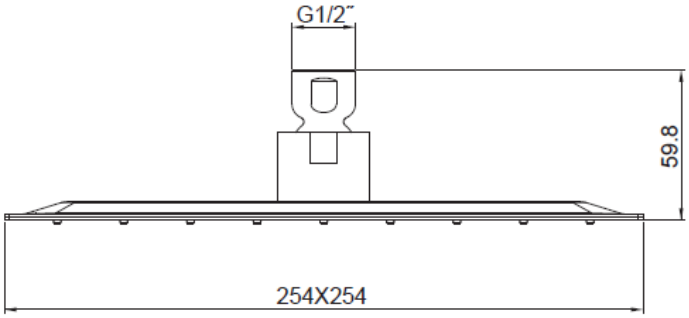

73040T-L

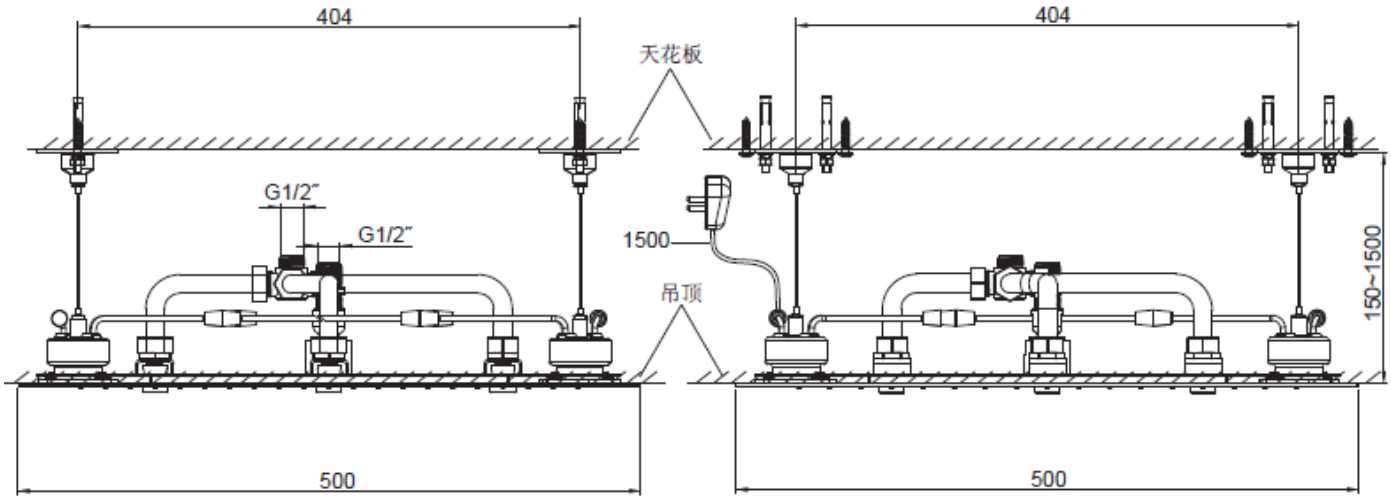

97167T-L

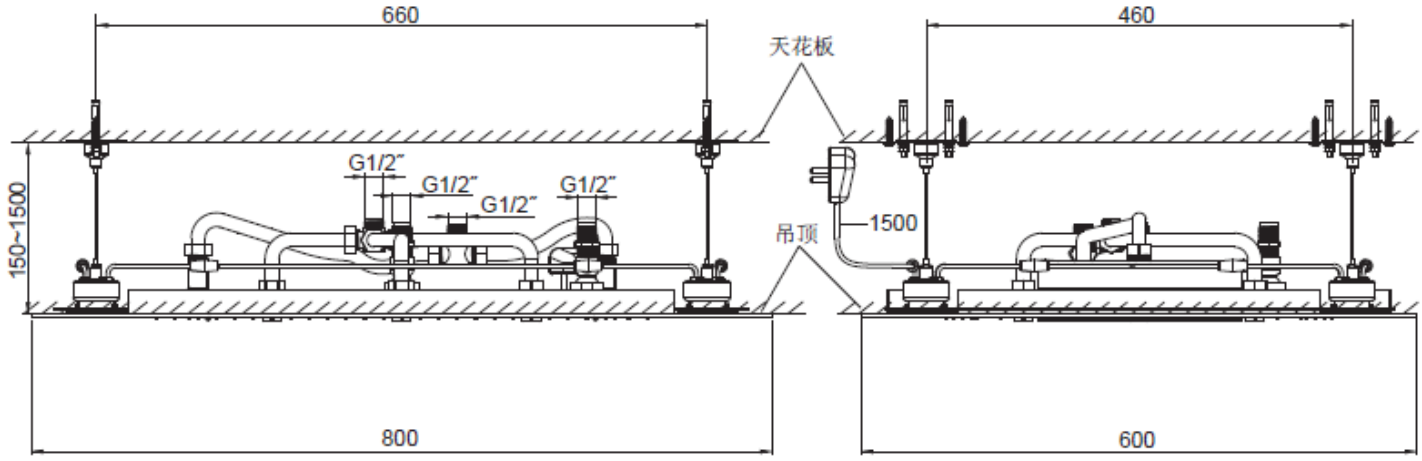

97168T-L