KOHLER. Faucets

Laminar
Bath Filler
K-923

Features
- Pressure-compensating flow control to deliver a splatter-free column of water.
- 0.95" (24 mm) orifice to optimize performance.
- Easy-to-access cartridge for cleaning and replacement.
- Complements the Purist® collection.

Material
- Solid brass construction.

Installation
- Wall- or ceiling-mount.

Codes/Standards
ASME A112.18.1/CSA B125.1
All applicable US Federal and State material regulations

See website for detailed warranty information.

Available Color/Finishes
Color tiles intended for reference only.

Color	Code	Description
	CP	Polished Chrome
	BN	Vibrant® Brushed Nickel

KOHLER. Faucets

Laminar
Bath Filler
K-923

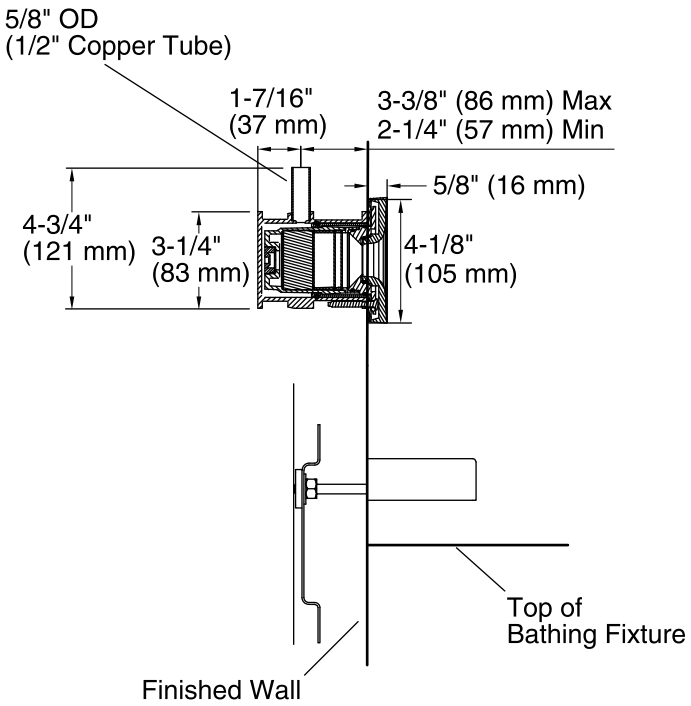

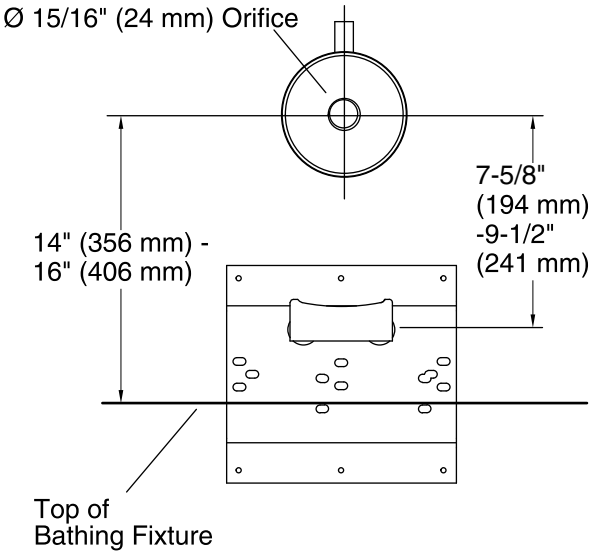

Technical Information
All product dimensions are nominal.

Notes
Install this product according to the installation guide.

For ceiling-mount installation, product must be mounted a maximum of 9’ (2.7 m) above the bath/whirlpool floor.

Drip tray (K-924) is an optional accessory available for wall-mount installation only.

Ensure a minimum of 36" (914 mm) of straight piping prior to the spout.

When a deck mounted transfer valve (K-408-K or K-409-K) is used for a ceiling mount, install a check valve between the spout and the diverter

In applications where excessive air could enter the water supply, install an air separator to eliminate air bubbles.

Flow rate is 7-15 gal/min (26.5-56.8 l/min)]. Splashing may occur if the flow rate is less than 5 gal/min (18.9 l/min).