KOHLER®

Urinal Strainer
K-9183

Features
- For use on vitreous china urinal.
- For caulking 2" iron pipe or soldering 2" lead pipe.

Material
- Brass construction.
- Stainless steel beehive grate.

Codes/Standards
ASME A112.18.1/CSA B125.1

KOHLER® One-Year Limited Warranty
See website for detailed warranty information.

KOHLER®

Urinal Strainer
K-9183

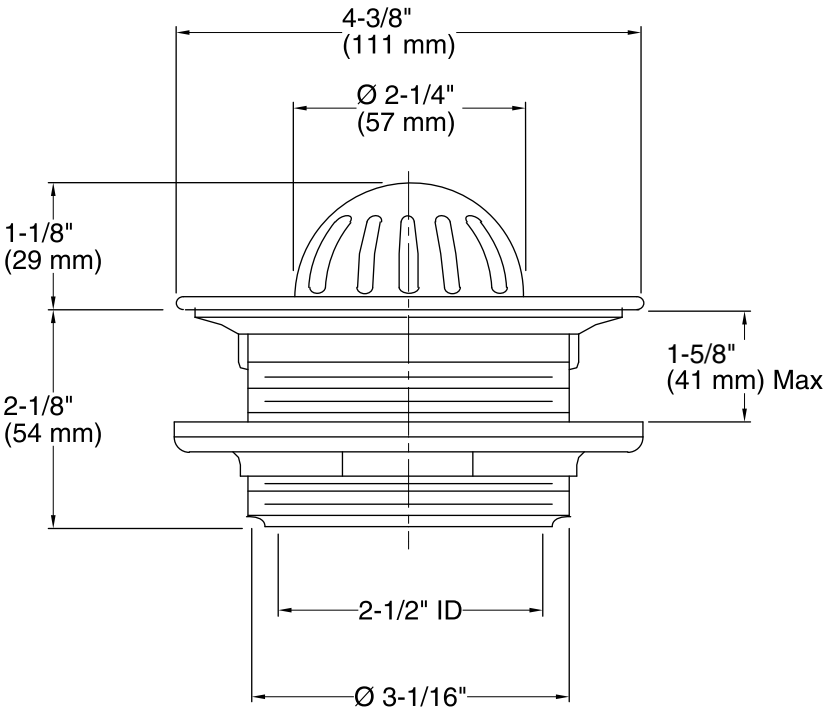

Technical Information
All product dimensions are nominal.

Notes
Install this product according to the installation guide.