KOHLER®

Toilet Seat
K-5589

Features
- Polypropylene plastic
- Round closed-front
- Contoured seat for user comfort
- Deodorizing System
- Dual LED nightlight
- Battery-operated (two D batteries)
- Easy-to-replace accessories

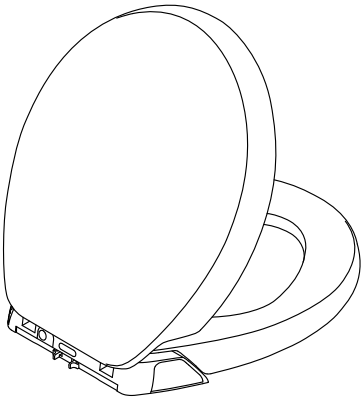

Codes/Standards
IAPMO/ANSI Z124.5

KOHLER® One-Year Limited Warranty
See website for detailed warranty information.

Available Color/Finishes
Color tiles intended for reference only.

Color	Code	Description
	0	White
	96	Biscuit

KOHLER®

Toilet Seat
K-5589

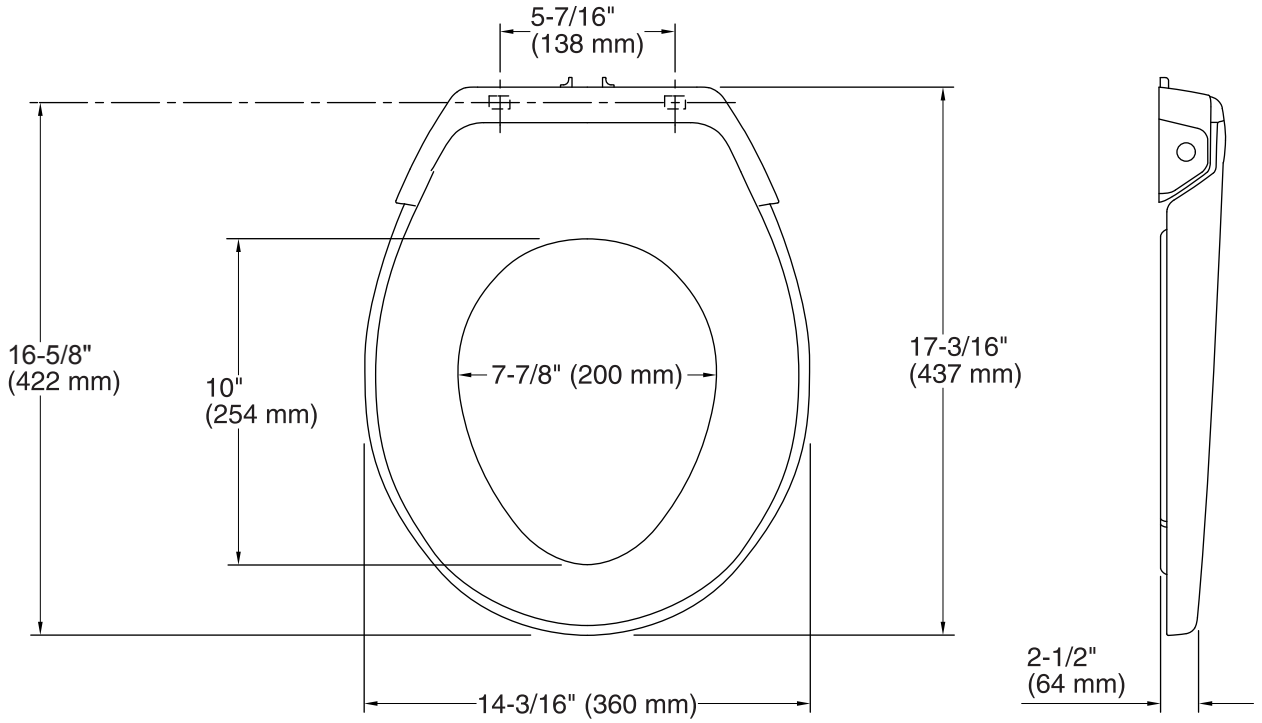

Technical Information

All product dimensions are nominal.

Seat shape type:	Round
Seat front type:	Closed front
Seat hinge type:	Quick-Attach®, Quick-Release™, Quiet-Close™
Seat-mounting holes:	5-7/16" (137 mm)

Notes

Install this product according to the installation guide.

Requires two D-cell batteries, not included.