KOHLER®

Archer®

6' Whirlpool Bath

K-1124-HR

Features

- Integral flange.
- Right drain.
- Slotted overflow for deep soaking.
- Comfort Depth® design offers a 19" (483 mm) step-over height.
- Integral lumbar support and armrests for comfort.
- Integral apron with removable access panel.
- Coordinates with other products in the Archer® collection.
- 72" (1829 mm) x 36" (914 mm) x 19" (483 mm)

Material

- Acrylic

Hydrotherapy

- Single-speed whirlpool offers eight fully adjustable hydro-massage jets for water flow and direction.
- Pump with air switch for whirpool.

Installation

- Alcove

Required Accessories

K-7271 Brass Slotted Overflow Bath Drain

or

K-7272 PVC Slotted Overflow Bath Drain

Recommended Accessories

K-9529 Removable Bath Seat
K-24916 Wireless Music Kit

ADA

Codes/Standards

ASME A112.19.7/CSA B45.10
CSA B45.5/IAPMO Z124
ASTM E162
ASTM E662
UL 1795
Greenguard UL 2818 - Gold
ADA
ICC/ANSI A117.1
CARB P2

KOHLER® One-Year Limited Warranty

See website for detailed warranty information.

Available Color/Finishes

Color tiles intended for reference only.

Color	Code	Description
	0	White
	96	Biscuit
	47	Almond
	NY	Dune
	95	Ice™ Grey
	G9	Sandbar
	33	Mexican Sand™
	K4	Cashmere

Archer®

6' Whirlpool Bath

K-1124-HR

No change in measurements if connected with drain illustrated. (K-7272)

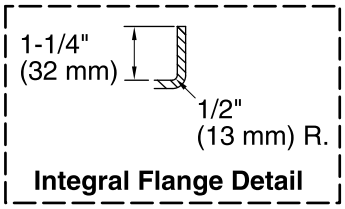

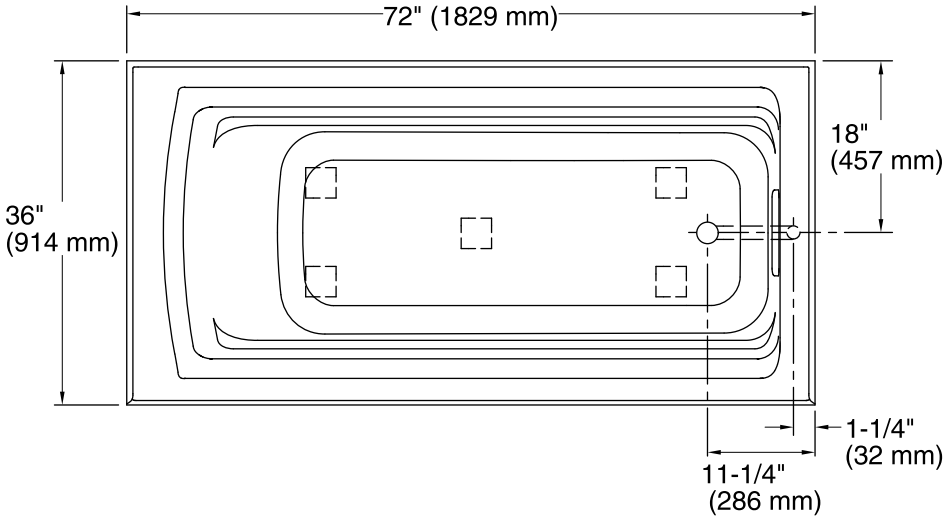

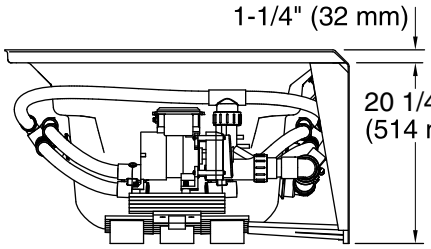

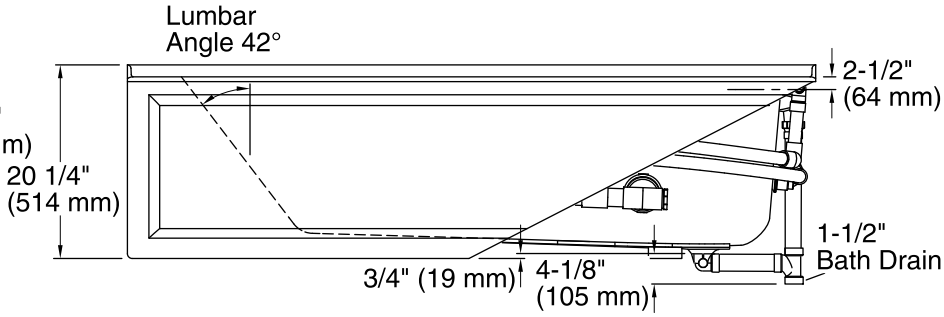

Required Electrical Service

Two dedicated circuits required, protected with Class A Ground-Fault Circuit-Interrupter (GFCI) or Residual Current Device (RCD).

Pump:	120 V, 15 A, 60 Hz
Heater:	120 V, 15 A, 60 Hz

Technical Information

All product dimensions are nominal.

Installation:	3-Wall Alcove
Drain location:	Right
Basin area, bottom:	51-3/8" x 21" (1305 mm x 533 mm)
Basin area, top:	64-1/2" x 30-1/2" (1638 mm x 775 mm)
Weight:	140 lbs (63.5 kg)
Minimum floor load:	43 lbs/ft² (209.9 kg/m²)
Water depth:	15" (381 mm)
Water capacity:	72 gal (272.5 L)
Electrical component rating:	Pump: 120 V, 7 A, 60 Hz Heater: 120 V, 12.5 A, 60 Hz, 1500 W
Pump speed:	Single
Minimum flat for door:	1-7/16" (36 mm)

Notes

Measure your actual product for rough-in details.

Install this product according to the installation instructions.

The hot water supply should be 70% of the capacity of the bath or greater. Installations will vary.

Provide one grounded electrical outlet within 24" (610 mm) of each component.

ADA compliant when installed to the specific requirements of these regulations.