KOHLER.

IN

Kohler India Corporation Pvt. Ltd.
6th Floor. Office Block, Ambiance Island, NH-8
Gurgaon - 122002, Haryana, India

Customer Care No : 1800 103 2244
(Toll Free) & +91-124-4319685 / 86
Customer Care Email : *indiacustomercare@kohler.com*
www.kohler.co.in

KOHLER.

AQUA TURBO 360

INSTALLATION INSTRUCTIONS

99924IN AQUA TURBO 360 MANUAL HIGH FLOW VALVE

BEFORE YOU BEGIN

All information is based on the latest product information available at the time of publication. Kohler Co. reserves the right to make changes in product characteristics, packaging, or availability at any time without notice.

Please leave these instructions for the consumer.They contain important information.

NOTES:

1. Flush the water supply pipes thoroughly to remove debris.
2. Inspect the supply tubing for damage. Replace as necessary.
3. Observe local plumbing codes.
4. Check for leaks before covering the pipes, repairs as needed.
5. Do not remove the protective cover from the valve body until instructed to.
6. The pressure difference between hot and cold water must be kept as low as possible (max. 1.5bar).
7. It is recommended to assemble filters for water inlets.

CLEANING INSTRUCTION

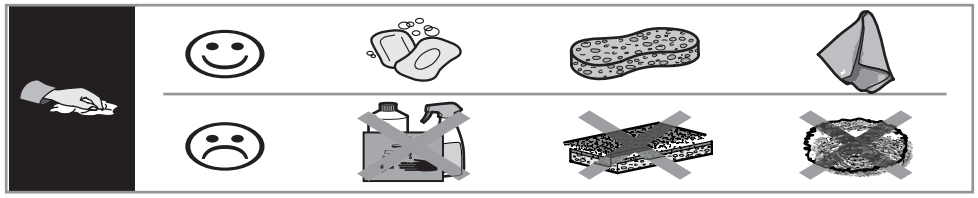

	P	Bar	0.5 < 3 < 6
	T	°C	< 65

ROUGH-IN DIMENSION (In mm)

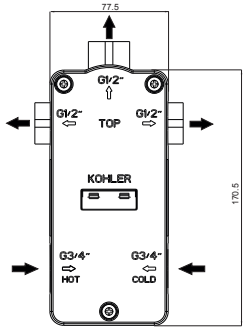

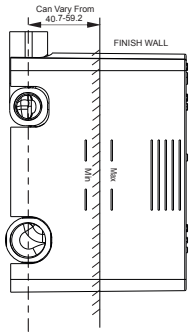

INSTALLATION - VALVE ASSEMBLY W.R.T FLOOR (IN MM)

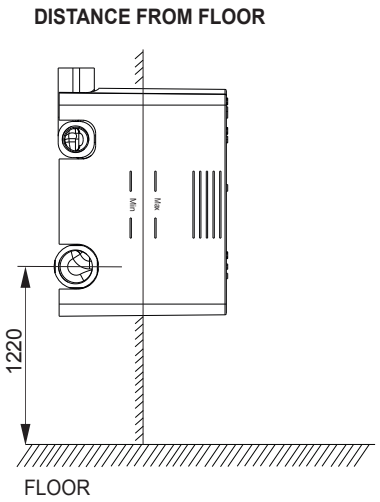

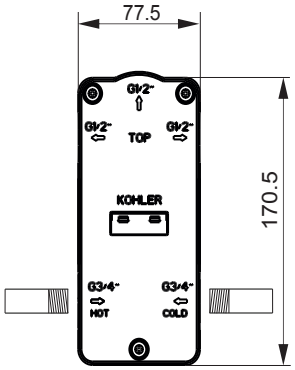

INSTALLATION-VALVE ASSEMBLY

1

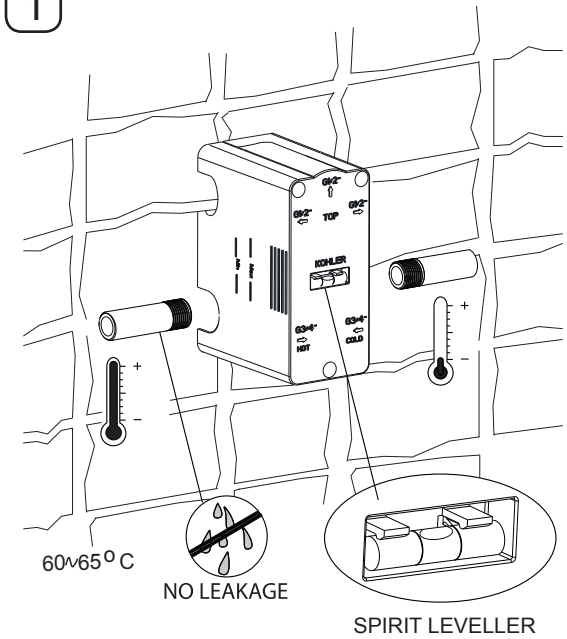

2

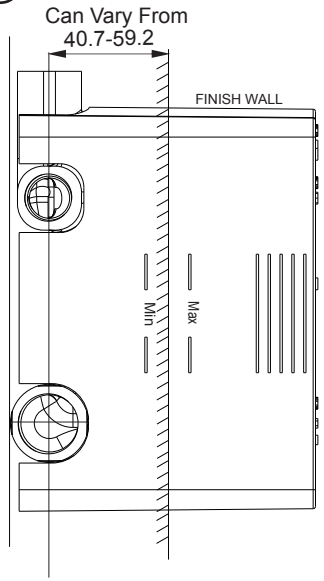

INSTALLATION-VALVE ASSEMBLY

3

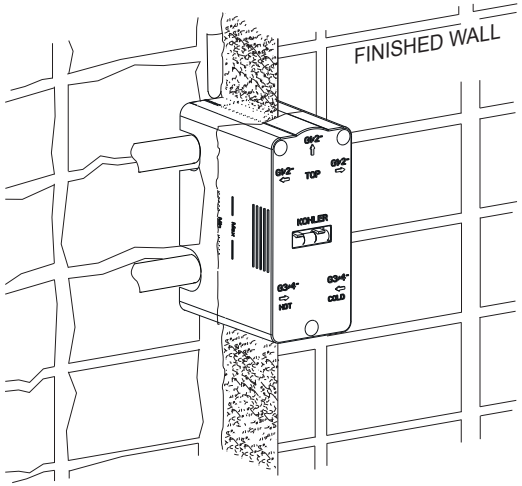

4

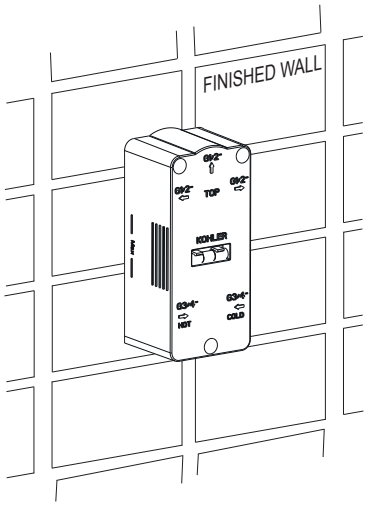

SERVICE PARTS
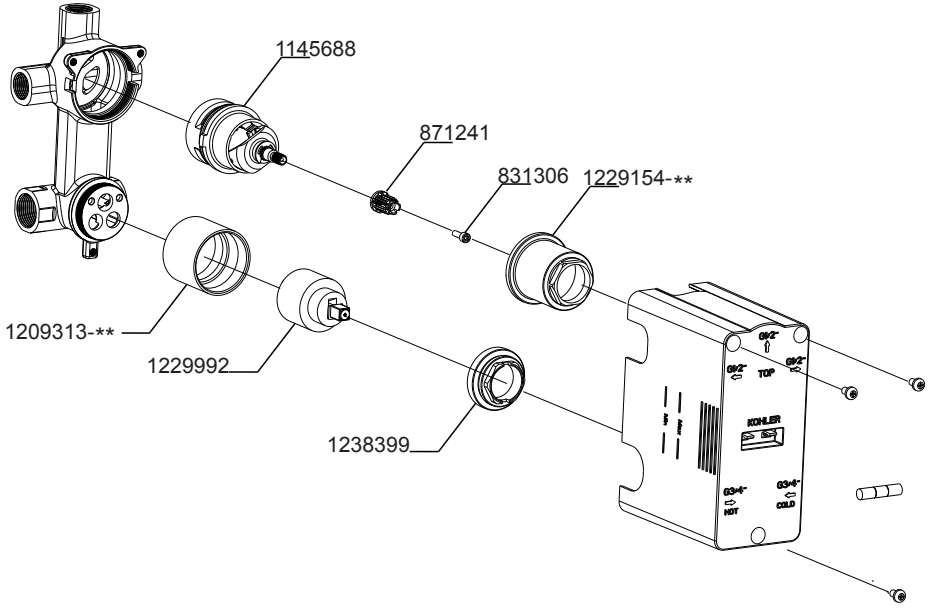
99924IN-**