KOHLER®

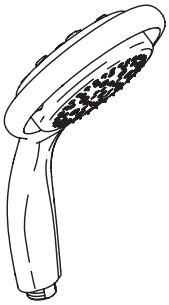

K-7293IN

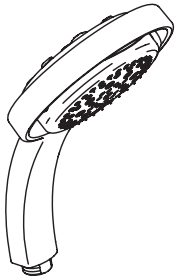

K-7294IN

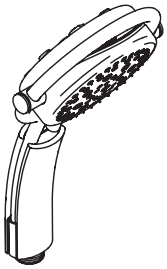

K-7295IN

K-5513IN

Flipside Handshower and Showerhead Installation and User Guide

MODEL NUMBERS

K-7293IN, K-7294IN, K-7295IN, K-5513IN

Important! Please quote the above model number(s) when ordering spares

IMPORTANT

INSTALLER: THIS MANUAL IS THE PROPERTY OF THE CUSTOMER AND MUST BE RETAINED WITH THE PRODUCT FOR MAINTENANCE AND OPERATIONAL PURPOSES.

1151983-IN2-A

BEFORE YOU BEGIN

1. Turn off the water supply.
2. Make sure that the showerhead is installed by a competent installer.
3. Before installation carefully inspect the new fixture for any signs of damage.
4. Kohler Co. reserves the right to make revisions in the design of products without notice.
5. Observe all the local plumbing and building codes and standards.

INSTALLATION

Handshower may differ slightly from the one shown, but the installation method is the same.

Install the Handshower

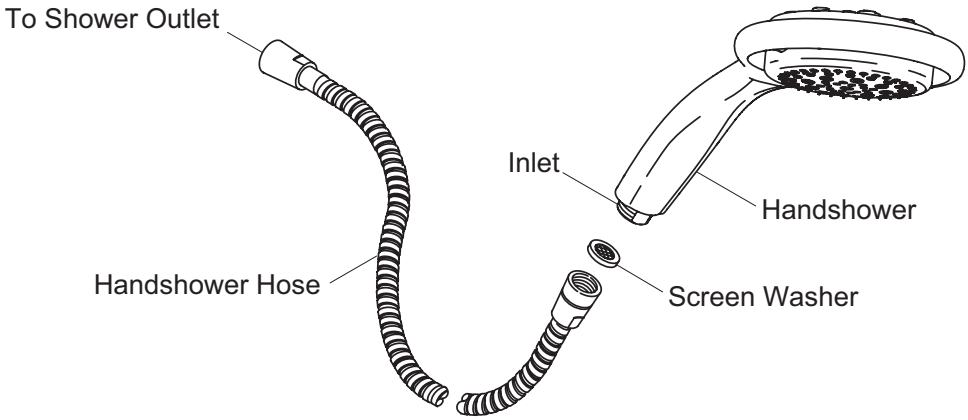

1. Run cold and hot water through the shower outlet to flush out any dirt and debris.
2. Insert the screen washer into the end of the inlet of the handshower hose.
3. Tighten the handshower onto the hose until hand tight. Do not overtighten.
4. Install the hose onto the shower outlet.
5. Use a suitable spanner to tighten the hose onto the shower outlet. Do not overtighten.

Install the Showerhead

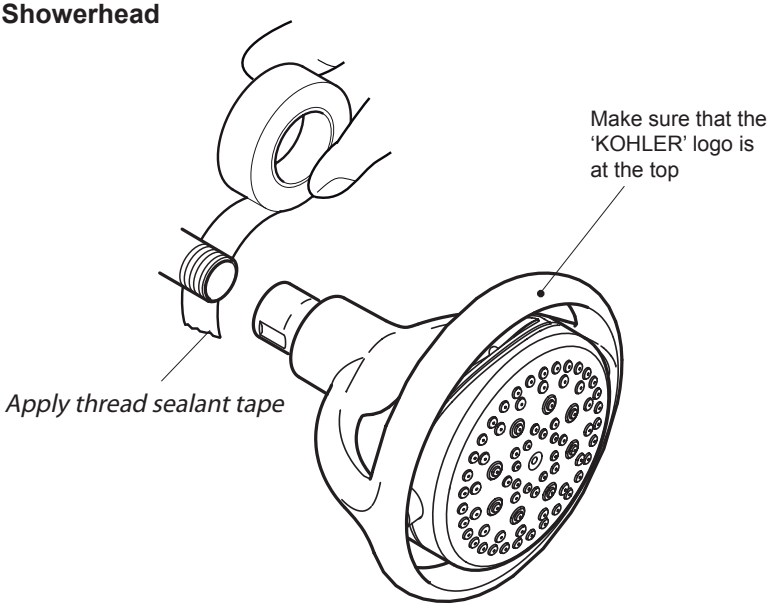

1. Apply PTFE tape over the threaded end of the shower arm. Do not use paste.
2. Turn on the water and allow water to flow through the shower arm to flush out any dirt and debris.
3. Turn off the water.
4. Tighten the showerhead onto the shower arm until hand tight.
5. Use a suitable spanner to tighten the showerhead onto the shower arm. Do not overtighten.

Complete the Installation

1. Turn on the shower valve (not shown).
2. Check for leaks. Make adjustments as required.
3. Rotate the handshower face to verify smooth operation of the spray options.
4. Turn off the shower valve.

OPERATION

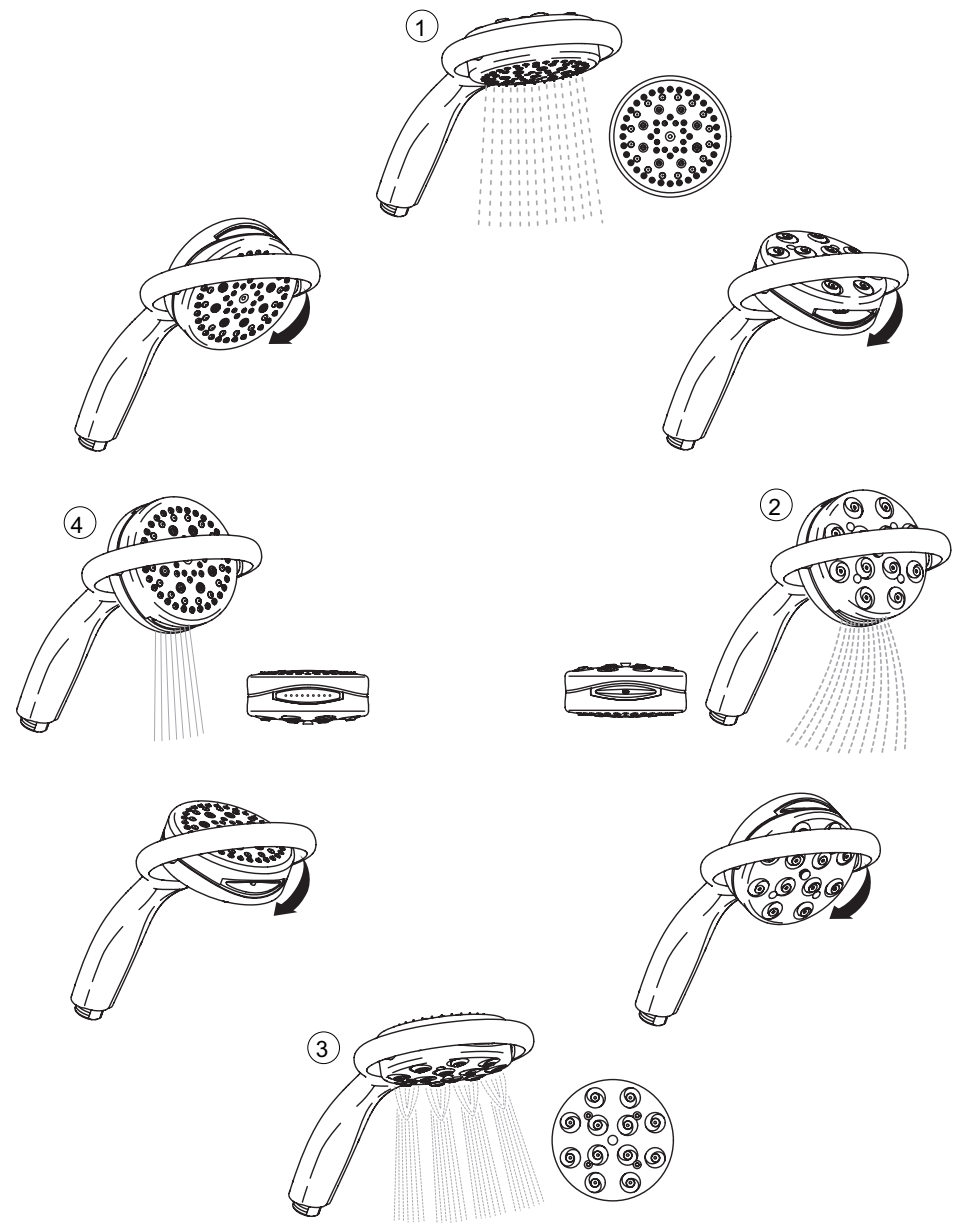

Rotate the head of the handshower to change the spray pattern

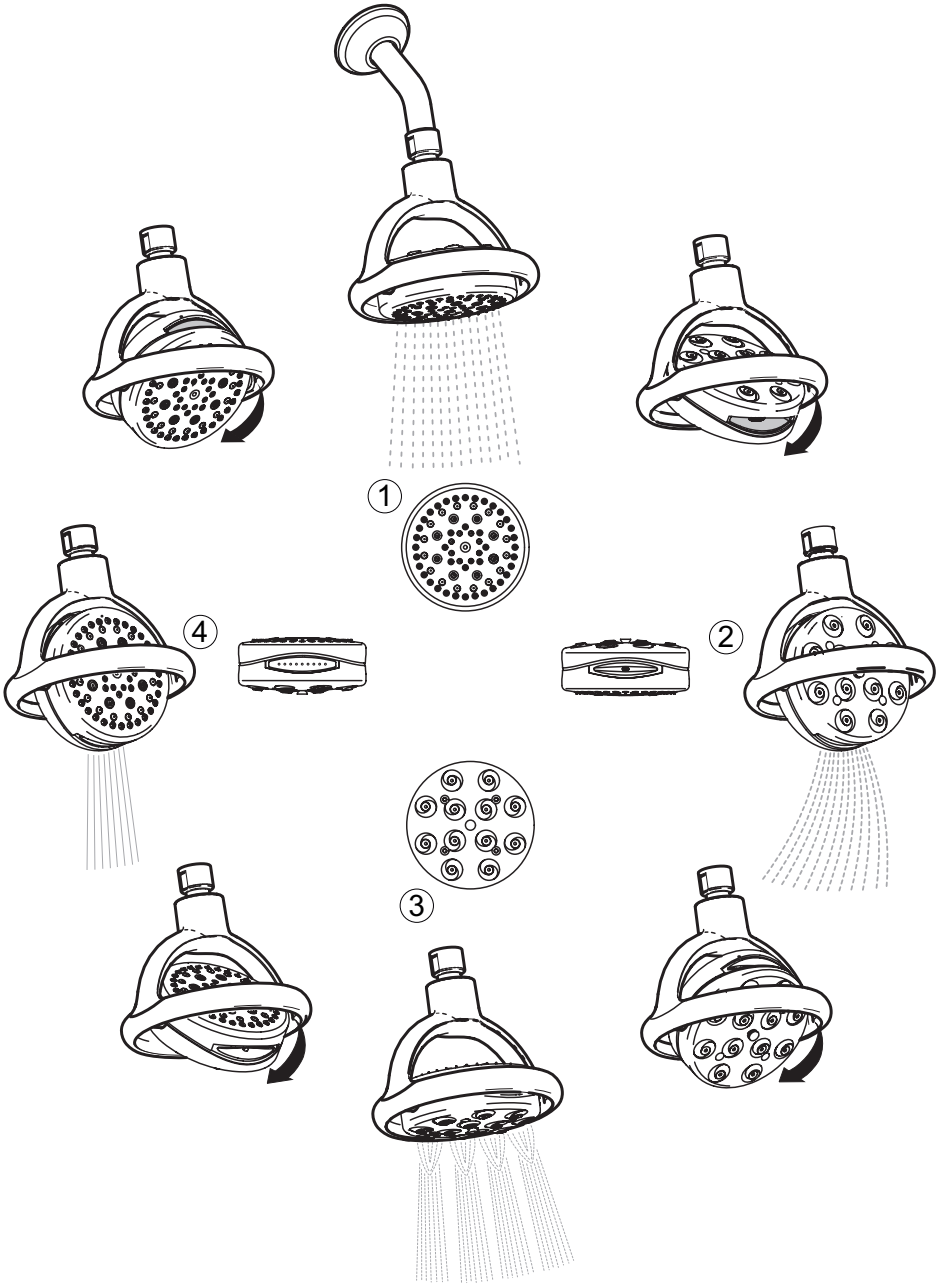

Rotate the face of the showerhead to change the spray pattern.

FAULT DIAGNOSIS

Symptom:

- *Sprayplate assembly blocked.*

Cause / Rectification:

- *Clean the sprayplate.*

Symptom:

- *Drip from sprayplate assembly.*

Cause / Rectification:

- *A small amount of water may be retained in the showerhead after the shower control has been turned off. This may drain over a few minutes. Changing the angle of the showerhead may vary the draining time.*

CARE AND CLEANING

For best results, keep the following in mind when caring for your KOHLER product:

Always test your cleaning solution on an inconspicuous area before applying to the entire surface.

Wipe surfaces clean and rinse completely with water immediately after applying cleaner. Rinse and dry any overspray that lands on nearby surfaces.

Do not allow cleaners to soak on surfaces.

Use a soft, dampened sponge or cloth. Never use an abrasive material such as a brush or scouring pad to clean surfaces.

The ideal cleaning technique is to rinse thoroughly and blot dry any water from the surface after each use.

USER MAINTENANCE

Clean the Spray Holes

Handshower may differ slightly from the one shown, but the installation method is the same.

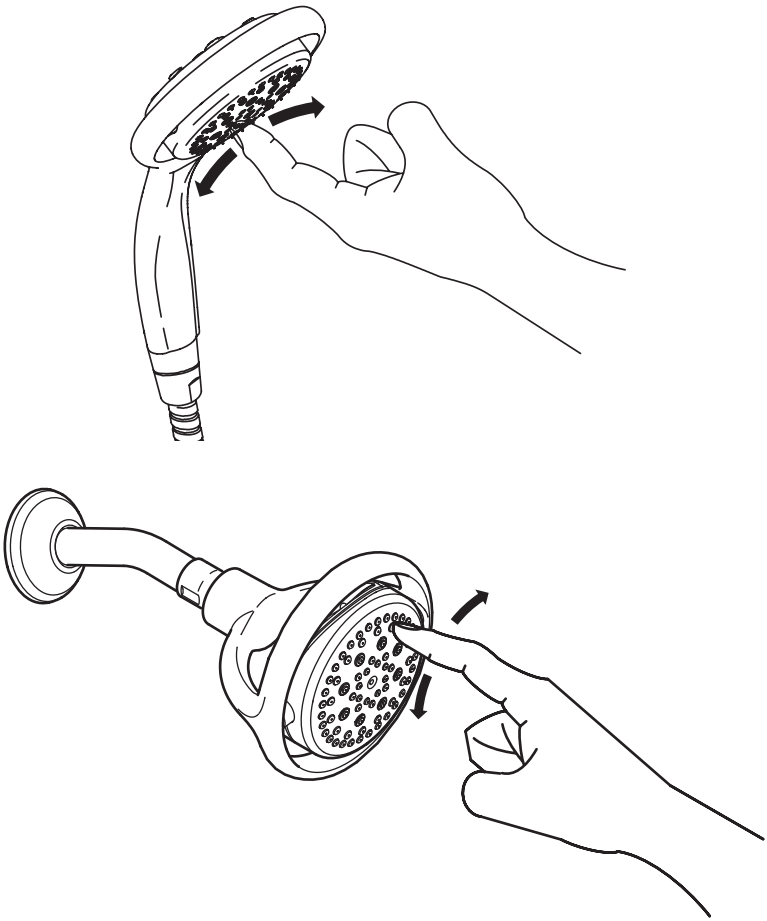

To dislodge debris and mineral build-up:

1. Run water through the handshower or showerhead.
2. Firmly rub your finger back and forth across the rubber spray nozzles on the handshower face.
3. If this procedure fails to improve the performance of the handshower or showerhead, then refer to ‘Clean the Screen Washer’, section of this guide.

Clean the Screen Washer

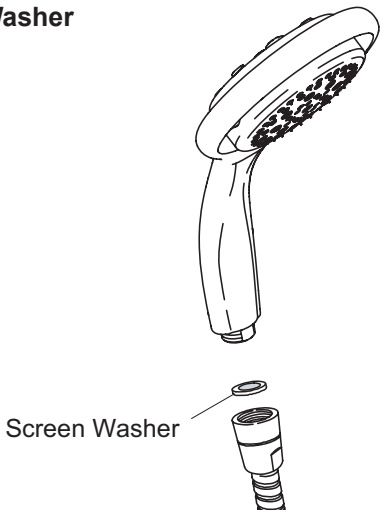

1. Using a suitable spanner, remove the handshower from the shower hose.
2. Using a suitable thin bladed screwdriver, carefully pry up the edges of the screen washer. Remove and clean the screen washer.
3. Reinstall the screen washer into the handshower as shown.
4. Reinstall the handshower to the shower hose.

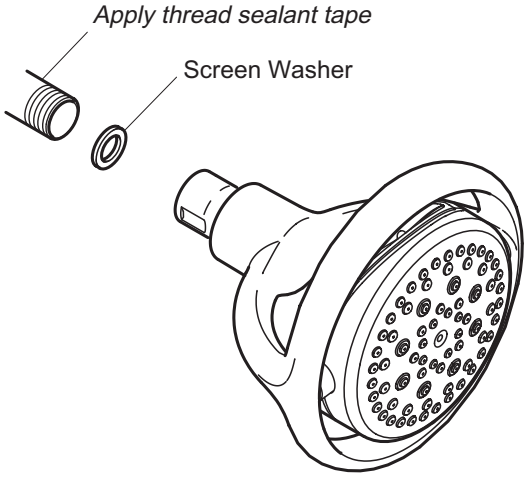

1. Using a suitable spanner, remove the showerhead from the shower arm.
2. Using a suitable thin bladed screwdriver, carefully pry up the edges of the screen washer. Remove and clean the screen washer.
3. Reinstall the screen washer into the showerhead as shown.
4. Apply PTFE tape over the threaded end of the shower arm. Do not use paste.
5. Reinstall the showerhead to the shower arm.

SPARE PARTS

1113204**
Handshower

1113203**
Handshower

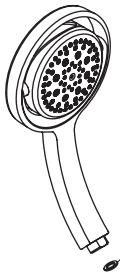

1113202**
Handshower

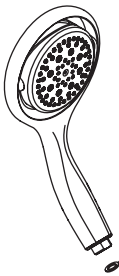

1152610**
Showerhead

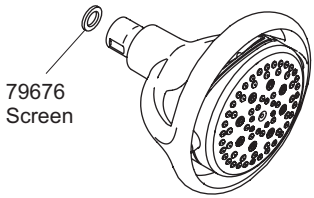

**Finish/color code must be specified when ordering.

DIMENSIONS

K-7293IN

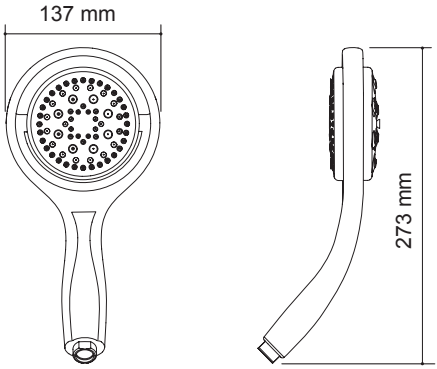

K-7295IN

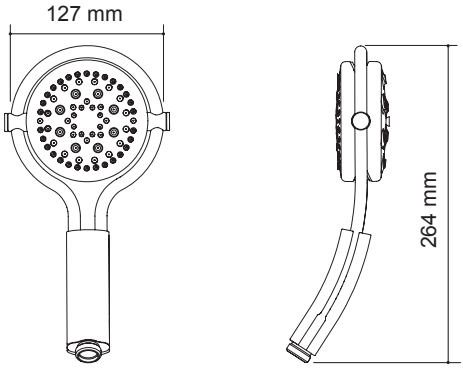

K-7294IN

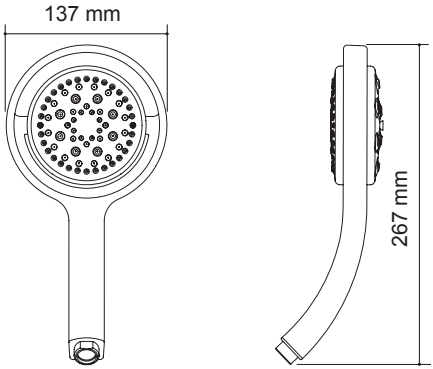

K-5513IN

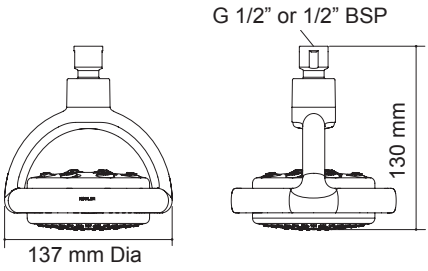

NOTES

CUSTOMER CARE

KOHLER India's Faucets* used in normal residential settings are warranted to be free of defects in material and workmanship for seven years from date of purchase. KOHLER India's Faucets* used in commercial settings are warranted to be free of defects in material and workmanship for five years from date of purchase. If, in the opinion of Kohler India, the defect is due to defects in material or workmanship, Kohler India will, for a period of 7 (seven) years, for faucets used in residential settings, and for 5 (five) years, for faucets used in commercial settings, from the date of sale of the Faucet to the original purchaser ("warranty period"), at its sole option, repair or replace free of cost, any defective component or part of the Faucet, subject to the terms and conditions described below:

1. Kohler India or its Authorized Service Franchisee alone can service/repair the Faucet.
2. Proof of purchase (original sales receipt) must be provided with all warranty claims or requests.
3. The service/repair of the warranty shall be provided only within the municipal limits of the town or city where the branch office of Kohler India or Authorized Service Franchisee is located.

To obtain warranty service, please contact:

India Customer Service Centre
Kohler India Corporation Pvt. Ltd.,
6th Floor, Office Block,
Ambience Mall, Ambi Island, NH-8
Gurgaon-122002
Haryana, India
www.kohler.co.in

4. If the Faucet is installed beyond the municipal limits of Kohler India's branch office/Authorized Service Franchisee locations, any and all costs and expenses incurred for repair/service of the Faucet in respect of a) to and from travel of service personnel b) transportation of the Faucet and/or spare parts and/or components from the location of Kohler India's branch office or Authorized Service franchisee to customer's location and back shall be borne wholly and solely by the customer at the prevailing rates, and Kohler India shall not be liable for any damage caused to the Faucet in transit or delivery for repair.
5. This warranty shall automatically terminate upon the expiry of the warranty period even if the Faucet has not been installed after purchase or has not been in use for any part or whole of the warranty period for any reason whatsoever.
6. This warranty remains applicable only if the Faucet has at all times been used strictly in accordance with the terms of this warranty and has not been improperly or negligently handled. This warranty does not cover problems arising from insufficient water pressure, excessive water impurities or improper care and cleaning**. Kohler is not responsible for labor charges, installation or other incidental or consequential costs. In no event shall the liability of Kohler India exceed the purchase price of the Faucet. Improper care and cleaning will void the warranty.
7. In the event of any repairs/replacement of any parts of the Faucet, this warranty shall thereafter continue and remain in force only for the unexpired period of the warranty. Any time consumed for the repair/ replacement of parts including transit of the Faucet or its parts or any period during which the Faucet has not been used whether under warranty or otherwise shall not be excluded from the warranty period.
8. In the event of non availability of components or parts due to any reason whatsoever neither Kohler India nor its Authorized Service Center nor the Dealer will be responsible or liable for any delay that may be caused to service/repair of the Faucet.

This is Kohler India's exclusive written warranty.

Care and cleaning guidelines for chrome and Vibrant® PVD colors/ finishes

- Do not use cleaners containing ammonia, bleach, or acid.
- Use a mild detergent (such as dishwashing soap). Do not use abrasive cleaners.
- Rinse and be sure to wipe the entire surface dry.

The ideal cleaning technique is to always blot dry any water from metal surfaces. Allowing water to evaporate on metal will form water deposits. It is important to use a dabbing action to dry metal, not an abrasive or rubbing action. Cleaning with a damp sponge and buff drying should keep your faucet looking beautiful.

*Trend™ faucets; MasterShower™ tower; BodySpa™ systems and components; WaterHaven™ tower, systems and components; Polished Gold finishes; fittings; all recommended fixture plumbing accessories, including but not limited to, grip rails, trim kits, drains: Duostrainer® sink strainers and soap/lotion dispensers; are warranted to the original purchaser to be free of defects in material and workmanship for one year from date of purchase. All other aspects and conditions of the above stated warranty, other than duration, apply to these faucets.

**Never use cleaners containing abrasive cleansers, ammonia, bleach, acids waxes, alcohol, solvents or other products not recommended for chrome. This will void the warranty.

© Kohler Mira Limited, June 2010