科勒® THE BOLD LOOK OF KOHLER
全 球 厨 卫 经 典

OVE 欧芙

安装说明书
INSTALLATION INSTRUCTIONS
釉面陶瓷一体式洗脸盆
VITREOUS CHINA WALL-HUNG LAVATORY
K-19950W/K-19951W

BEFORE YOU BEGIN

- Observe all local plumbing and building codes.
- Prior to installation, unpack the new lavatory and inspect it for damage. Return the lavatory to its protective carton until you are ready to install it.
- All information in these instructions are based the latest product information available at the time of publication. Kohler China reserves the right to make changes in product characteristics, packaging, or availability at any time without notice.

IMPORTANT: Make sure that the wall and floor are square and plumb to ensure proper installation.

安装之前

- 遵守当地所有给排水及建筑规定。
- 安装之前先开启新脸盆的包装，检查有无破损后放回纸箱中以免碰坏，到准备安装时才取用。
- 本说明书所含一切资料，均以印刷时所有的最新产品为准。科勒公司保留随时更改产品特性，包装或供应情况的权利，恕不另行通知。

注意：墙壁和地板必须方正、平整和水平。

ORDERING INFORMATION

OVE Vanity Top.....K-19950W
Includes Mounting Kits 1034692
OVE Vanity Top.....K-19951W
Includes Mounting Kits 1034692

订购信息

欧芙梳洗台 K-19950W
含挂墙配件.....1034692
欧芙梳洗台 K-19951W
含挂墙配件.....1034692

REQUIRED MATERIALS/TOOLS (NOT SUPPLIED)

- Level
- Drill with 6mm bit
- 14mm wrench
- Framing square
- Channel lock pliers
- Tape measure

所需工具和材料（不随货供应）

- 水平尺
- 带6mm钻头的电锤钻
- 14mm板钳
- 定位直尺
- 锁钳
- 卷尺

上海科勒国际贸易有限公司
上海市外高桥保税区新灵路106号2号楼324室 邮编：200131

Ⓒ版权为科勒中国有限公司所有，2006
ⒸCopyright Kohler China Ltd., 2006

ROUGHING-IN DIMENSIONS 尺寸图

UNIT: mm
单位:毫米

K-19950W

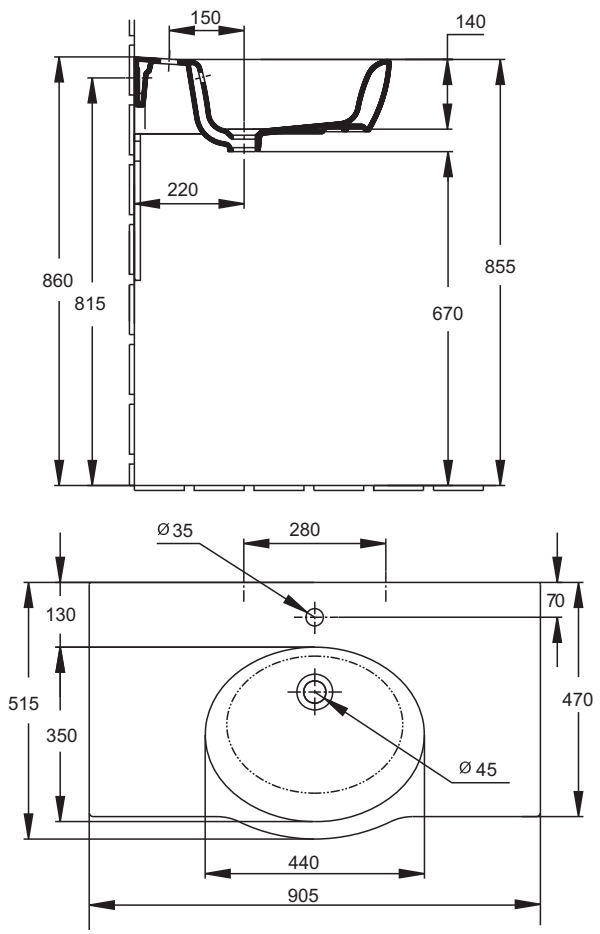

K-19951W

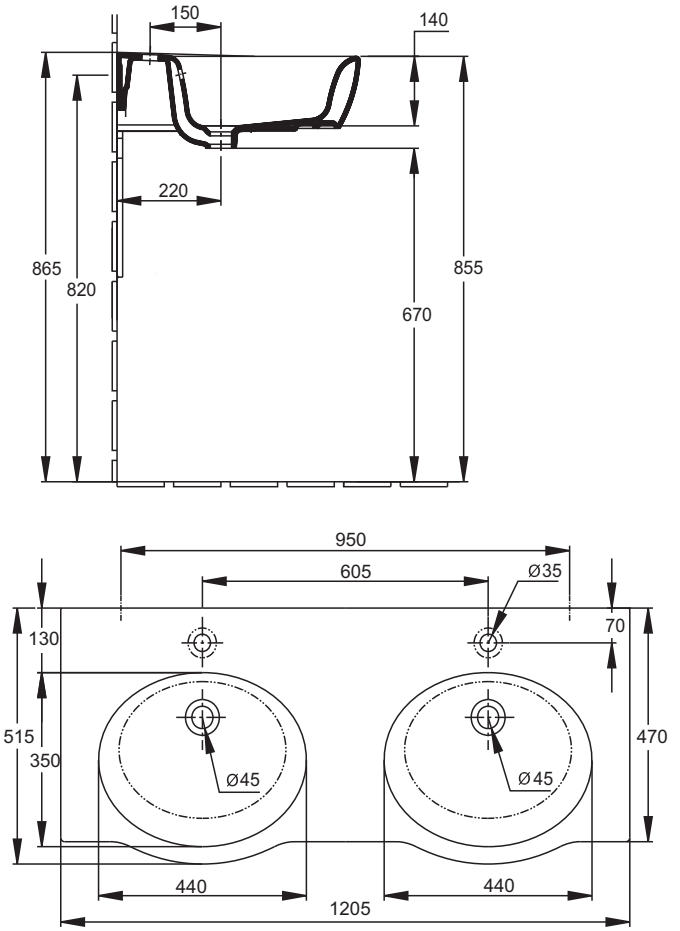

Fig.#1
图1

INSTALLATION 安装

Install the Basin

Note! The vanity tops can be installed on a cabinet or matching metal stand (refer to Installation and User Guide packed with the cabinet or stand for installation details).

- Recommend Kohler metal square leg or Kohler bathroom furniture for support or decoration.

1. Install the services.
2. Make sure that the hot and cold water supply pipes and the waste are installed correctly.
3. Mark the position on the wall for the attachment bolts.

⚠ **Caution!** Make sure that you avoid hidden cables and pipes when drilling holes in the wall.

4. Drill the fixing holes.
5. Fit the wall plugs and attachment bolts.

安装脸盆

注意! 此脸盆可装在橱柜或匹配的金属台上。(参考附在橱柜或支架包装内的安装说明获取安装信息。)

- 推荐使用科勒金属支脚或科勒浴室家俱作为支撑和装饰。

1. 安装检修部件。
2. 确认冷热水管和排水管安装正确。
3. 在墙上标记附带螺丝的位置。

⚠ **警告！** 确保在您钻孔时不会触及隐藏的光缆和水管。

4. 钻固定孔。
5. 装上墙面膨胀管和附带螺丝。

Note! The hot and cold water supplies must terminate with a supply shut off valve.

注意！冷热水管的终端必须与供水管止水阀相连。

6. Fit the tap to the basin in accordance with the manufacturer s instructions.

6. 根据产商说明书将龙头安装至脸盆。

,

Single Vanity Top
单龙头脸盆

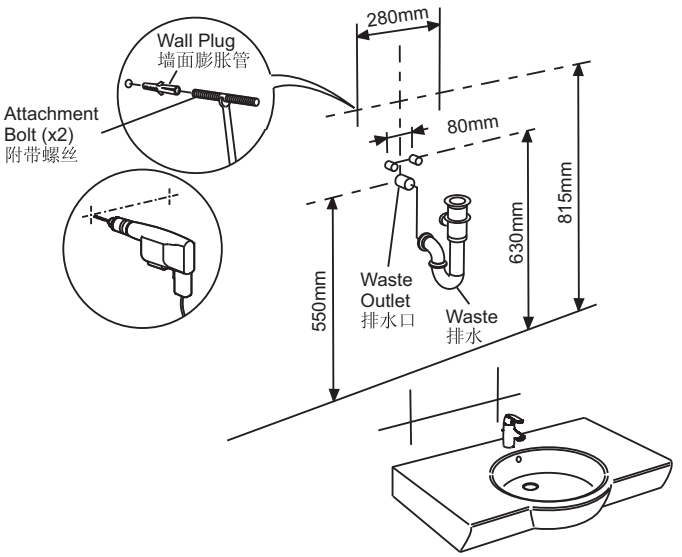

Fig.#2
图2

Double Vanity Top
双龙头脸盆

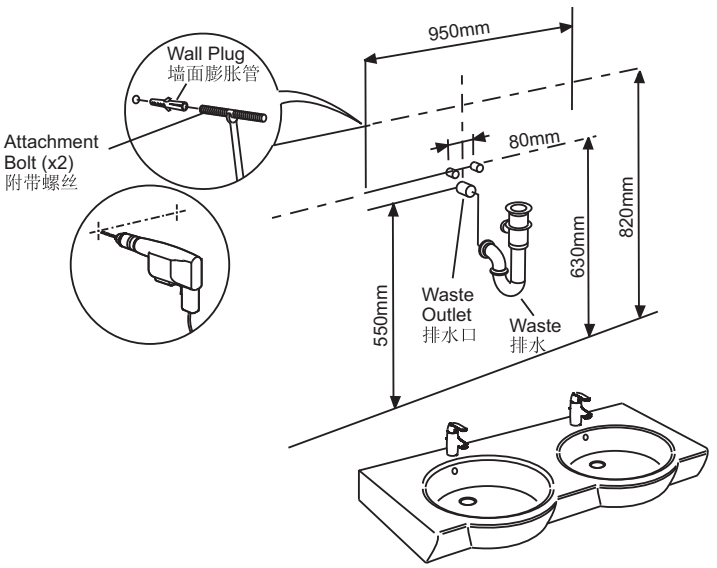

Fig.#3
图3

7. Apply silicone sealant to the back of the basin.

8. Fit the basin in position over the attachment bolts.

9. Adjust the offset nut until the basin is level.

10. When the basin is level, fit the washers and the nuts to secure in place.

11. Remove any excess silicone sealant.

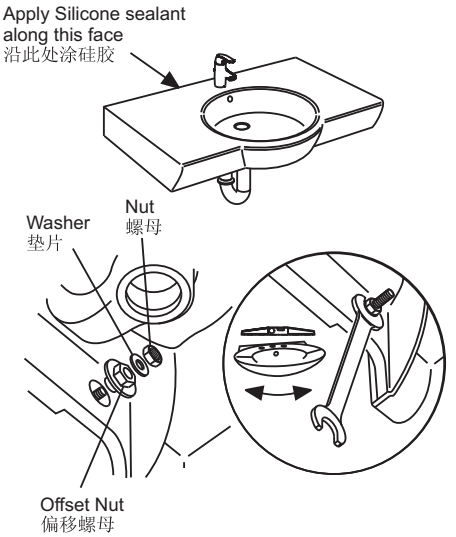

Fig.#4
图4

7. 在脸盆后部涂硅胶。

8. 将脸盆固定在附带螺丝上。

9. 调节偏移螺母直至脸盆水平。

10. 当脸盆水平时，将垫片和螺母固定到位。

11. 除去多余的硅胶。

---

12. Place the overflow cover over the overflow hole in the basin, making sure it is orientated correctly.

12. 将溢水盖装至脸盆的溢水孔上。

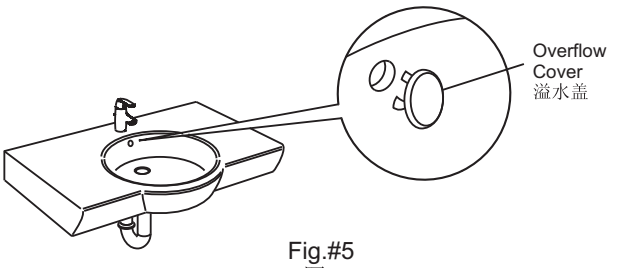

Fig.#5
图5

Install the Plumbing

1. Install the drain in accordance with the manufacturer's instructions.

⚠ **Caution!** Make sure a watertight seal exists on all basin drain connections.

⚠ **Caution!** Provide access to the plumbing connections for future plumbing maintenance.

2. Connect the hot and cold water supplies.

3. Open the hot and cold water valves, and check the supply connections for leaks.

4. Run water into the basin, and check the drain connections for leaks.

安装管道

1. 根据产商安装说明安装落水。

⚠ 警告！确保在脸盆所有的排水连接处有防水密封。

⚠ 警告！提供管道连接检修门以便日后管道维护。

2. 连接冷热供水。

3. 打开冷热水阀，检查供水连接是否漏水。

4. 向脸盆中注水，检查排水连接是否漏水。

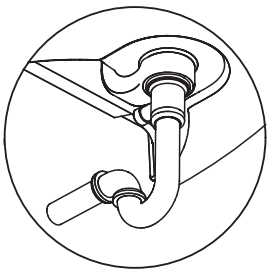

Fig.#7
图7

IMPORTANT CONSUMER INFORMATION

CARE AND CLEANING

⚠ **Caution! Risk of product damage.**

Many cleaners contain abrasive and chemical substances, and should not be used for cleaning stainless steel, enamel, plated or plastic fittings.

These finishes should be cleaned using a mild washing up detergent or soap solution, rinsed and then wiped dry with a soft clean cloth.

To keep your lavatory looking new, make sure you rinse it out thoroughly after each use. **DO NOT USE ABRASIVES** on this product, as they will scratch and ruin the surface. Stubborn stains, paint, or tar can be removed with turpentine or paint thinner.

用户须知

护理及清洁

⚠ 警告！有产品损坏的危险。

许多清洁剂包含磨损性的化学物质，不应该用来清洗不锈钢、釉质、镀金或塑料部件。

这些部件应用温和的清洁剂或者肥皂水来清洗、漂净，然后用柔软干净的布擦干。

为保持脸盆常新，请确保每次使用后立即彻底冲洗，**但切勿用腐蚀性清洁剂**，以防止刮花或磨损盆面。如有顽渍、油漆或柏油点，可用松油或油漆稀释剂清洗。

LIMITED ONE-YEAR WARRANTY

Plumbing Fixtures and Fittings Limited One-year Warranty

Kohler plumbing fixtures and fittings are warranted to be free of manufacturing defects.

This product is warranted for one year from date of purchase. Kohler China will be responsible for any problems caused by manufacturing defects provided with the invoice. Kohler China will, at its election, repair, replace or make appropriate adjustment where Kohler China inspection discloses any such defects occurring in normal usage within one year after purchase.

Implied warranties including that of merchantability and fitness for a particular purpose are expressly limited in duration to the duration of this warranty, Kohler China disclaims any liability for special, incidental or consequential damages. Damages to the product caused by misuse, abuse and installation that is not in accordance with the owner's manual are not covered by this warranty.

To obtain quick warranty service, please contact your dealer, or write to Kohler China. (Original sales receipt must be provided as the proof of purchase.)

Kohler China Investment Company Ltd.
Central Customer Service Center
19/F, Shanghai Square, 138 Huai Hai Road,
Luwan District, Shanghai, PRC
Zip Code: 200021

This is our exclusive written warranty.

一年有限担保

陶瓷及浴缸产品及配件担保——一年有限担保

科勒公司担保其陶瓷及浴缸产品及配件在制造工艺上无瑕疵。

本产品自购买之日起即获得本公司一年的质量保证。在质保期内，凭购货发票，科勒公司将免费承担由制造质量引起的任何问题。经核查后，科勒中国有限公司有权决定是修理、更换、还是作适当的调整。

这里所指的担保，包括产品，都已明确地限制在该担保期之内。科勒中国有限公司对其后出现的损坏不负有任何责任。担保也不包括外观损伤、使用不当以及未按说明书安装的损失。

为获得快捷的担保服务，请联系您的销售商；您也可写信给科勒中国有限公司(请出示销售发票原件作为购货凭证)：

科勒(中国)投资有限公司
中央客户服务中心
上海市卢湾区淮海中路138号
上海广场19楼
邮编：200021

这是我们全部的书面担保。