KOHLER

WAVE$_{TM}$ Wall-mount Bath and Shower Faucet

WAVE$_{TM}$
K-7788T-4

Product Specification:

Model	Spout		Includes	Finish	NOTE
	Reach	Height			
K-7788T-4	177mm	-	177mm spout, valve, aerator, hose, diverter, handle, bush, bracket, 360º Flipside 01 Handshower	CP	Common package

Product Dimension:

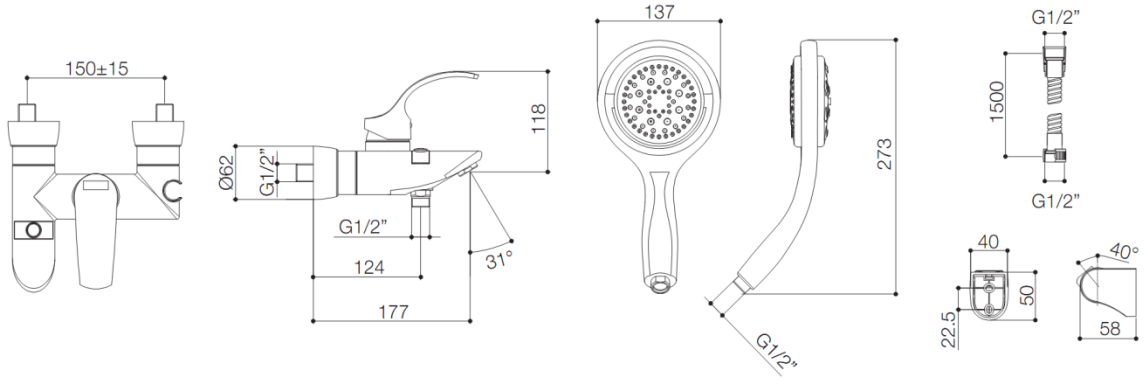

K-7788T-4

*The above information are subject to change without notice.