robern®

M SERIES DECORATIVE CABINET

Features

- *Recess or surface mount*
- *Colored glass or tinted mirror doors with mirrored, matte silver interior*
- *3-way adjustable concealed hinge system*
- *SAFESEAL® gasket frame*
- *Patented swing-out magnifying mirror*
- *Rust-free aluminum construction*
- *Right hinge door*
- *Four adjustable glass shelves*
- *Electric feature includes two duplex 15 A, 110 VAC GFCI outlets*
- *15-1/4" (38.7 cm) W x 39-3/8" (100 cm) H x 8-5/8" (21.9 cm) D*

RIGHT HAND, WITH ELECTRIC
MP16D8F11RE
ALSO MP16D8F12RE, MP16D8F13RE, MP16D8F14RE, MP16D8F15RE, MP16D8F16RE, MP16D8F17RE, MP16D8F18RE, MP16D8F19RE

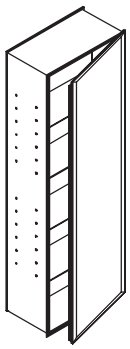

Codes/Standards Applicable

Specified model meets or exceeds the following:

- *Electrical cabinets are UL listed*

Specified Model

Model	Description	
MP16D8F11RE	Tinted Gray Mirror, right hand, with electric	❑
MP16D8F12RE	Satin Bronze, right hand, with electric	❑
MP16D8F13RE	Satin Gray, right hand, with electric	❑
MP16D8F14RE	Champagne Mesh, right hand, with electric	❑
MP16D8F15RE	Onyx Mesh, right hand, with electric	❑
MP16D8F16RE	Hammered Oil Rubbed Bronze, right hand, with electric	❑
MP16D8F17RE	Hammered Platinum, right hand, with electric	❑
MP16D8F18RE	Vintage Ivory, right hand, with electric	❑
MP16D8F19RE	Satin White, right hand, with electric	❑
NOTE: Additional hardware is required for installing cabinets side-by-side.		

Required Accessories - For Surface Mount and Semi-Recessed Installations Only		
MPSK40D811	Tinted Gray Mirror side kit - surface mount	❑
MPSK40D812	Satin Bronze side kit - surface mount	❑
MPSK40D813	Satin Gray side kit - surface mount	❑
MPSK40D814	Champagne Mesh side kit - surface mount	❑
MPSK40D815	Onyx Mesh side kit - surface mount	❑
MPSK40D816	Hammered Oil Rubbed Bronze side kit - surface mount	❑
MPSK40D817	Hammered Platinum side kit - surface mount	❑
MPSK40D818	Vintage Ivory side kit - surface mount	❑
MPSK40D819	Satin White side kit - surface mount	❑
MPSK40D8SR11	Tinted Gray Mirror side kit - semi-recess mount	❑
MPSK40D8SR12	Satin Bronze side kit - semi-recess mount	❑
MPSK40D8SR13	Satin Gray side kit - semi-recess mount	❑
MPSK40D8SR14	Champagne Mesh side kit - semi-recess mount	❑
MPSK40D8SR15	Onyx Mesh side kit - semi-recess mount	❑
MPSK40D8SR16	Hammered Oil Rubbed Bronze side kit - semi-recess mount	❑
MPSK40D8SR17	Hammered Platinum side kit - semi-recess mount	❑
MPSK40D8SR18	Vintage Ivory side kit - semi-recess mount	❑
MPSK40D8SR19	Satin White side kit - semi-recess mount	❑

USA: 1-800-877-2376
www.robern.com

M SERIES DECORATIVE CABINET

Required Accessories - For Multiple Cabinets Installed or Stacked Vertically Only		
MSF___S	Stack filler for surface mounted cabinet installations	❑
MSF___R	Stack filler for recessed cabinet installations	❑
MSF___D2	Stack filler for partially recessed cabinet installations	❑
Follow MSF with width of full cabinet array plus any installed lights when ordering. For example, MSF **49.5** S is stack filler for two surface mounted 24″ (61 cm) cabinets and one kit of 1-1/2″ (3.8 cm) lights [23-1/4″ (59.1 cm) + 23-1/4″ (59.1 cm) + 1-1/2″ (3.8 cm) + 1-1/2″ (3.8 cm)].		

Optional Accessories		
SLB16D8	Safety-lock box	❑
MGKIT	M ganging kit - hardware required for installing 2 or 3 cabinets side-by-side	❑
Frames, light options, and additional accessories are available. Refer to the Price Guide for more information.		

Technical Information

Roughing-in opening	14-1/2″ (36.8 cm) W x 38-5/8″ (98.1 cm) H x 8″ (20.3 cm) D
Door opening angle	170°

Installation Notes

Install this product according to the installation guide.

When determining the height of the mirrored cabinet, ensure the mirrored door will clear all obstacles, such as a faucet. A minimum distance of 1″ (2.5 cm) is required.

Secure the screws (provided) to a stud to avoid possible property and product damage. If this is not possible, anchors (provided) must be inserted before installing the screws.

Modular components can be joined horizontally and vertically. When ganging cabinets: rough opening width/height = total width/height of all cabinets and lights minus 3/4″ (1.9 cm).

Stack filler is required for vertical stacking.

Recessed cabinets project 7/8″ (2.2 cm) from wall.

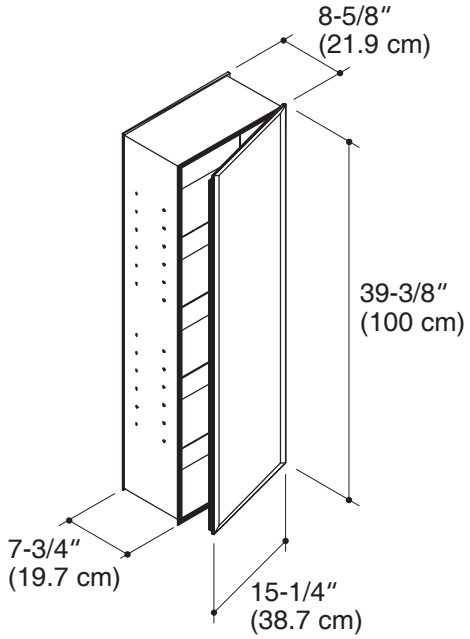

Electrical Connection Detail (Rear View)

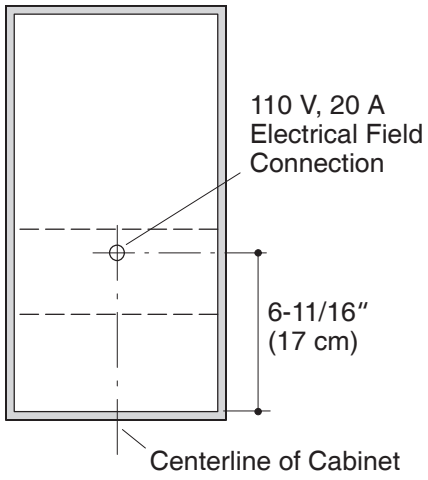

Product Diagram