robern®

M SERIES DECORATIVE CABINET

LEFT HAND, WITH ELECTRIC

MP24D6F11LE

ALSO MP24D6F12LE, MP24D6F13LE, MP24D6F14LE, MP24D6F15LE, MP24D6F16LE, MP24D6F17LE, MP24D6F18LE, MP24D6F19LE

Features

- *Recess or surface mount*
- *Colored glass or tinted mirror doors with mirrored, matte silver interior*
- *3-way adjustable concealed hinge system*
- *SAFESEAL® gasket frame*
- *Patented swing-out magnifying mirror*
- *Rust-free aluminum construction*
- *Left hinge door*
- *Four adjustable glass shelves*
- *Electric feature includes two duplex 15 A, 110 VAC GFCI outlets*
- *23-1/4" (59.1 cm) W x 39-3/8" (100 cm) H x 6-5/8" (16.8 cm) D*

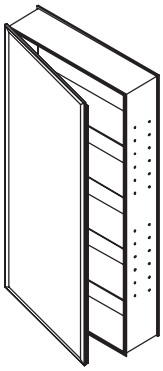

Codes/Standards Applicable

Specified model meets or exceeds the following:

- *Electrical cabinets are UL listed*

Specified Model

Model	Description	
MP24D6F11LE	Tinted Gray Mirror, left hand, with electric	❑
MP24D6F12LE	Satin Bronze, left hand, with electric	❑
MP24D6F13LE	Satin Gray, left hand, with electric	❑
MP24D6F14LE	Champagne Mesh, left hand, with electric	❑
MP24D6F15LE	Onyx Mesh, left hand, with electric	❑
MP24D6F16LE	Hammered Oil Rubbed Bronze, left hand, with electric	❑
MP24D6F17LE	Hammered Platinum, left hand, with electric	❑
MP24D6F18LE	Vintage Ivory, left hand, with electric	❑
MP24D6F19LE	Satin White, left hand, with electric	❑
NOTE: Hardware required for installing cabinets side-by-side is included.		

Required Accessories - For Surface Mount and Semi-Recessed Installations Only		
MPSK40D611	Tinted Gray Mirror side kit - surface mount	❑
MPSK40D612	Satin Bronze side kit - surface mount	❑
MPSK40D613	Satin Gray side kit - surface mount	❑
MPSK40D614	Champagne Mesh side kit - surface mount	❑
MPSK40D615	Onyx Mesh side kit - surface mount	❑
MPSK40D616	Hammered Oil Rubbed Bronze side kit - surface mount	❑
MPSK40D617	Hammered Platinum side kit - surface mount	❑
MPSK40D618	Vintage Ivory side kit - surface mount	❑
MPSK40D619	Satin White side kit - surface mount	❑
MPSK40D6SR11	Tinted Gray Mirror side kit - semi-recess mount	❑
MPSK40D6SR12	Satin Bronze side kit - semi-recess mount	❑
MPSK40D6SR13	Satin Gray side kit - semi-recess mount	❑
MPSK40D6SR14	Champagne Mesh side kit - semi-recess mount	❑
MPSK40D6SR15	Onyx Mesh side kit - semi-recess mount	❑
MPSK40D6SR16	Hammered Oil Rubbed Bronze side kit - semi-recess mount	❑
MPSK40D6SR17	Hammered Platinum side kit - semi-recess mount	❑
MPSK40D6SR18	Vintage Ivory side kit - semi-recess mount	❑
MPSK40D6SR19	Satin White side kit - semi-recess mount	❑

USA: 1-800-877-2376
www.robern.com

M SERIES DECORATIVE CABINET

Required Accessories - For Multiple Cabinets Installed or Stacked Vertically Only		
MSF___S	Stack filler for surface mounted cabinet installations	❑
MSF___R	Stack filler for recessed cabinet installations	❑
MSF___D2	Stack filler for partially recessed cabinet installations	❑
Follow MSF with width of full cabinet array plus any installed lights when ordering. For example, MSF **49.5** S is stack filler for two surface mounted 24″ (61 cm) cabinets and one kit of 1-1/2″ (3.8 cm) lights [23-1/4″ (59.1 cm) + 23-1/4″ (59.1 cm) + 1-1/2″ (3.8 cm) + 1-1/2″ (3.8 cm)].		

Optional Accessories		
SLB24D6	Safety-lock box	❑
Frames, light options, and additional accessories are available. Refer to the Price Guide for more information.		

Technical Information

Roughing-in opening	22-1/2″ (57.2 cm) W x 38-5/8″ (98.1 cm) H x 6″ (15.2 cm) D
Door opening angle	170°

Installation Notes

Install this product according to the installation guide.

When determining the height of the mirrored cabinet, ensure the mirrored door will clear all obstacles, such as a faucet. A minimum distance of 1″ (2.5 cm) is required.

Secure the screws (provided) to a stud to avoid possible property and product damage. If this is not possible, anchors (provided) must be inserted before installing the screws.

Modular components can be joined horizontally and vertically offering unlimited storage space. When ganging cabinets: rough opening width/height = total width/height of all cabinets and lights minus 3/4″ (1.9 cm).

Stack filler is required for vertical stacking.

Recessed cabinets project 7/8″ (2.2 cm) from wall.

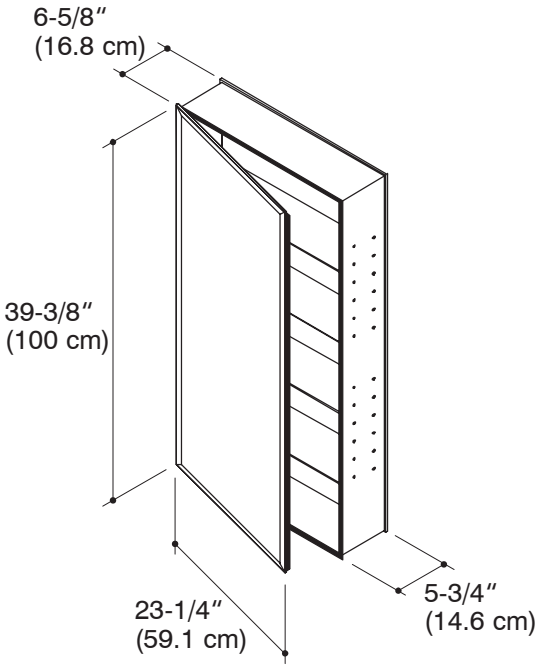

Electrical Connection Detail
(Rear View)

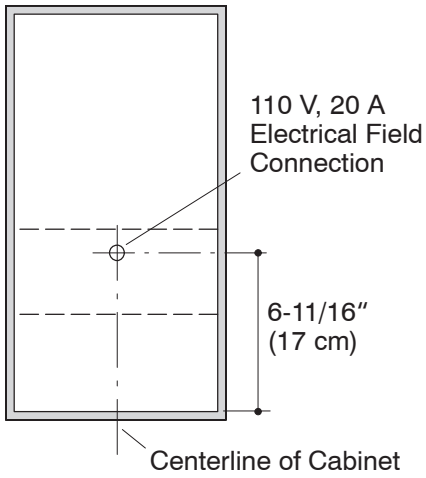

Product Diagram