robern®

# M SERIES DECORATIVE CABINET

## RIGHT HAND

# MF20D8F11R

### ALSO MF20D8F12R, MF20D8F13R, MF20D8F14R, MF20D8F15R, MF20D8F16R, MF20D8F17R, MF20D8F18R, MF20D8F19R

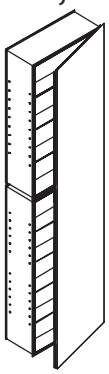

## Features

- *Recess or surface mount*
- *Colored glass or tinted mirror doors with mirrored, matte silver interior*
- *3-way adjustable concealed hinge system*
- *SAFESEAL® gasket frame*
- *Patented swing-out magnifying mirror*
- *Rust-free aluminum construction*
- *Right hinge door*
- *Seven adjustable glass shelves*
- *19-1/4" (48.9 cm) W x 70" (177.8 cm) H x 8-5/8" (21.9 cm) D*

## Codes/Standards Applicable

Specified model meets or exceeds the following:

- *None applicable*

## Specified Model

| Model | Description | |
|---|---|---|
| MF20D8F11R | Tinted Gray Mirror, right hand | ❑ |
| MF20D8F12R | Satin Bronze, right hand | ❑ |
| MF20D8F13R | Satin Gray, right hand | ❑ |
| MF20D8F14R | Champagne Mesh, right hand | ❑ |
| MF20D8F15R | Onyx Mesh, right hand | ❑ |
| MF20D8F16R | Hammered Oil Rubbed Bronze, right hand | ❑ |
| MF20D8F17R | Hammered Platinum, right hand | ❑ |
| MF20D8F18R | Vintage Ivory, right hand | ❑ |
| MF20D8F19R | Satin White, right hand | ❑ |
| **NOTE:** Additional hardware is required for installing cabinets side-by-side. | | |

| **Required Accessories - For Surface Mount and Semi-Recessed Installations Only** | | |
|---|---|---|
| MFSK70D811 | Tinted Gray Mirror side kit - surface mount | ❑ |
| MFSK70D812 | Satin Bronze side kit - surface mount | ❑ |
| MFSK70D813 | Satin Gray side kit - surface mount | ❑ |
| MFSK70D814 | Champagne Mesh side kit - surface mount | ❑ |
| MFSK70D815 | Onyx Mesh side kit - surface mount | ❑ |
| MFSK70D816 | Hammered Oil Rubbed Bronze side kit - surface mount | ❑ |
| MFSK70D817 | Hammered Platinum side kit - surface mount | ❑ |
| MFSK70D818 | Vintage Ivory side kit - surface mount | ❑ |
| MFSK70D819 | Satin White side kit - surface mount | ❑ |
| MFSK70D8SR11 | Tinted Gray Mirror side kit - semi-recess mount | ❑ |
| MFSK70D8SR12 | Satin Bronze side kit - semi-recess mount | ❑ |
| MFSK70D8SR13 | Satin Gray side kit - semi-recess mount | ❑ |
| MFSK70D8SR14 | Champagne Mesh side kit - semi-recess mount | ❑ |
| MFSK70D8SR15 | Onyx Mesh side kit - semi-recess mount | ❑ |
| MFSK70D8SR16 | Hammered Oil Rubbed Bronze side kit - semi-recess mount | ❑ |
| MFSK70D8SR17 | Hammered Platinum side kit - semi-recess mount | ❑ |
| MFSK70D8SR18 | Vintage Ivory side kit - semi-recess mount | ❑ |
| MFSK70D8SR19 | Satin White side kit - semi-recess mount | ❑ |



USA: 1-800-877-2376
www.robern.com

# M SERIES DECORATIVE CABINET

| Required Accessories - For Ganging Multiple Cabinets Only | | |
|---|---|---|
| MHANDLEKIT | Chrome handle - required when ganging MF cabinets **or** | ❑ |
| MPUSHKIT | Push-to-open mechanism - required when ganging MF cabinets | ❑ |
| MSFMF | Stack filler - required when ganging surface-mounted MF with MT cabinets | ❑ |
| MFGKIT | MF ganging kit - hardware required for installing 2 or 3 cabinets side-by-side | ❑ |
| **NOTE:** MF cabinets cannot be ganged with MP cabinets. | | |

| Optional Accessories | | |
|---|---|---|
| SLB20D8 | Safety-lock box | ❑ |
| Light options and additional accessories are available. Refer to the Price Guide for more information. | | |

## Technical Information

| | |
|---|---|
| Roughing-in opening | 18-1/2″ (47 cm) W x 69-1/4″ (175.9 cm) H x 8″ (20.3 cm) D |
| Door opening angle | 170° |

## Installation Notes

Install this product according to the installation guide.

When determining the height of the mirrored cabinet, ensure the mirrored door will clear all obstacles, such as a faucet. A minimum distance of 1″ (2.5 cm) is required.

Secure the screws (provided) to a stud to avoid possible property and product damage. If this is not possible, anchors (provided) must be inserted before installing the screws.

Modular components can be joined horizontally.
When ganging cabinets: rough opening width =
total width of all cabinets and lights minus 3/4″ (1.9 cm).

Recessed cabinets project 7/8″ (2.2 cm) from wall.

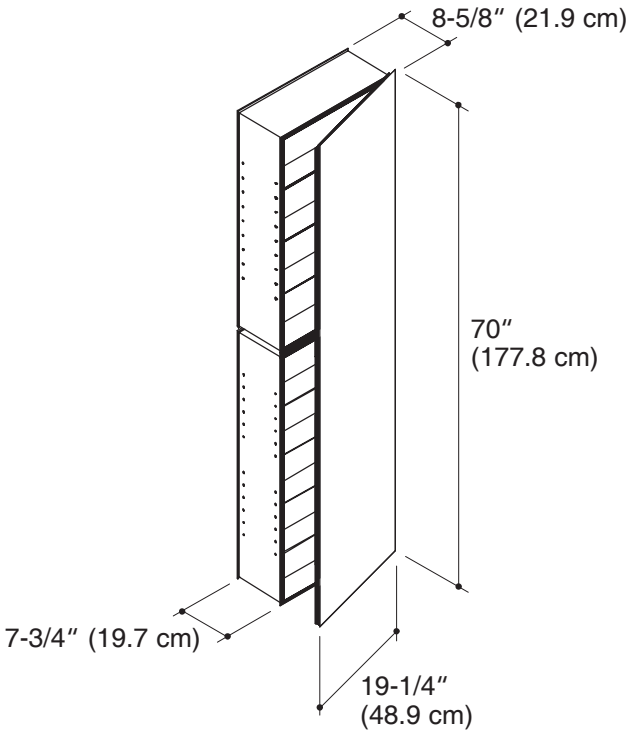


**Product Diagram**