robern®

M SERIES FLAT DOOR CABINET

MY12D4FBN

ALSO MY12D4FPN

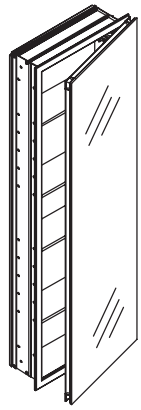

Features

- *Recess or surface mount (side kit available)*
- *Mirrored doors and interior, matte silver interior*
- *3-way adjustable concealed hinge system*
- *SAFESEAL® gasket frame*
- *Patented swing-out magnifying mirror (SOMM)*
- *Concealed finger pull-door edge*
- *Rust-free aluminum construction*
- *Can be installed as a left- or right-hand door swing*
- *Four adjustable 1/4" (6 mm) glass shelves*
- *12" (30.5 cm) W x 36" (91.4 cm) H x 4-5/8" (11.7 cm) D*

Codes/Standards Applicable

Specified model meets or exceeds the following:

- *None applicable*

Specified Model

Model	Description	
MY12D4FBN	Beveled edge	❑
MY12D4FPN	Plain edge	❑
NOTE: Hardware required for installing cabinets side-by-side is included. MY cabinets cannot be stacked.		

Required Accessories - For Surface Mount Installations Only		
MYSK36D4B	Beveled mirror side kit	❑
MYSK36D4P	Plain mirror side kit	❑

USA: 1-800-877-2376
www.robern.com

Technical Information

Roughing-in opening	11-1/4″ (28.6 cm) W x 35-1/4″ (89.5 cm) H x 4″ (10.2 cm) D
Door opening angle	170°

Installation Notes

Install this product according to the installation guide.

When determining the height of the mirrored cabinet, ensure the mirrored door will clear all obstacles, such as a faucet. A minimum distance of 1″ (2.5 cm) is required.

Secure the screws (provided) to a stud to avoid possible property and product damage. If this is not possible, anchors (provided) must be inserted before installing the screws.

Modular components can be joined horizontally.
When ganging cabinets: rough opening width =
total width of all cabinets and lights minus 3/4″ (1.9 cm).

MY cabinets cannot be stacked.

Recessed cabinets project 7/8″ (2.2 cm) from wall.

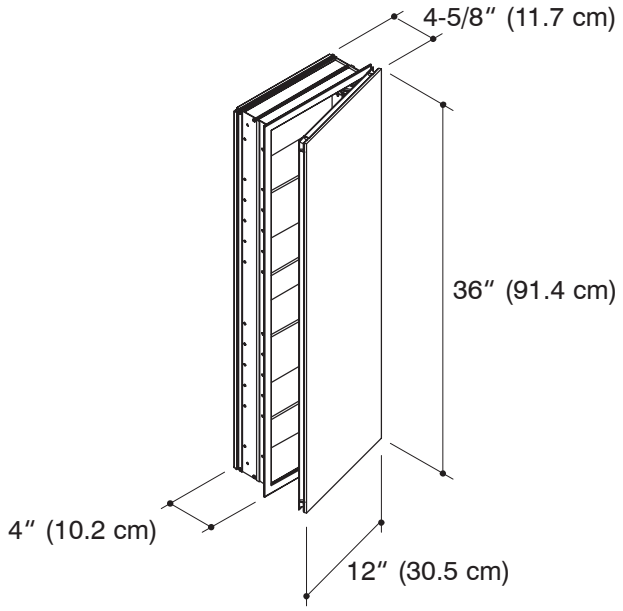

Product Diagram